viccarbe

2018

Europe pricelist

Premio Príncipe Felipe
a la excelencia empresarial

We inspire Mediterranean experiences in collaborative spaces.

What makes us different?

· Warranty period is 5 years.

· Public Prices List include freight costs.

· Average production Time = 4 weeks (20 working days).

· Environmental friendly products for your projects (ISO 14.001).

· Samples and Mock-ups are easily provided to success with your projects.

· A passionate and concerned team will be happy to assist you with any questions and ensuring a speedy response.

· Save money and time considering Viccarbe collection as the preferred partner for ancillary solutions.

· Only one contact to manage the sample and mock-up requests, the quotation, the logistics, and an accurate lead time!

Are you sure that all manufacturers offer the same?

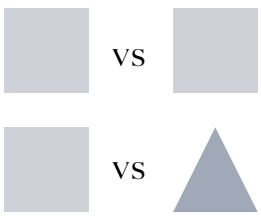

The quality of the product has 2 clear different purposes:

1- Quality of materials performace (sewing stitching details, lacquers, etc) helps to improve the look and the proper aging after a sever use.

2- Furniture interaction with people = user safety.

Our products have passed high-end the most demanding quality tests for severe use (Bifma and UNE) in search of maximum safety, to avoid preventing a breakage from to cause an accident that affects the user's physical integrity, which would undoubtedly lead to a legal responsibility for the trading company.

Viccarbe products, even including this added value, have a very balanced price so we recommend that you always compare under equal conditions.

Greetings from the Viccarbe team!

INSTRUCTIONS FOR USING THE PRICELIST

When you click on a product image in the index, the pdf will direct you to the page for the product.

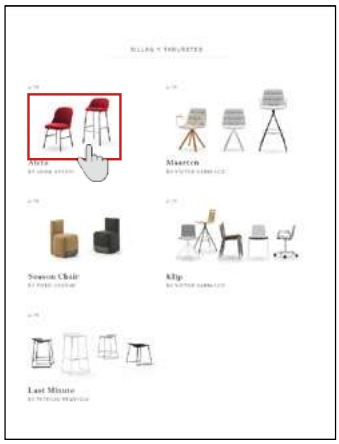

When you click on the blue links, the pdf will direct you to the samples at the end of the document.

INFORMATION AVAILABLE ABOUT EACH PRODUCT

CODE	MODEL	PACKAGING	WEIGHT	FINISHES	PUBLIC PRICE (Fire Re. Foam)	PUBLIC PRICE
The reference number of each product to be included in the order.	Describes a specific product within a collection of products.	Specify the dimensions of the boxes that contain the product in cm (length/width/height) and their volume in m3.	Shows the weight of the packaged product in kg.	Indicates the possible finishes, both lacquers and upholstery, for each product (see page 20).	Price in Euro for Fire Retardant Foam.	Price of the product in euros.

INSTRUCTIONS FOR USING THE PRICELIST

When you click the image of a product on the cover page, the pdf will direct you to the product website.

When you click on the words "click here to return to the index" at the bottom of a price sheet, the pdf will direct you to the index.

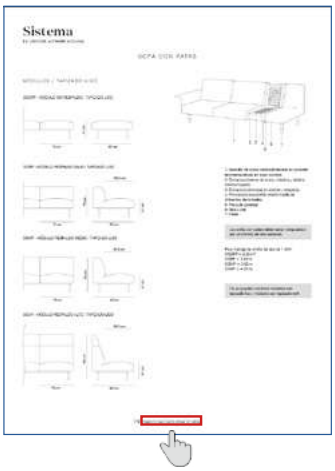

SIMBOLYSM

Product available for outdoor use.

Maximum number of chairs stacked.

Number of boxes used for packing each product.

Number of products contained in one box.

CHAIRS AND STOOLS

p.23

Aleta

BY JAIME HAYON

p.57

Maarten Chair

BY VÍCTOR CARRASCO

p.54

Season Chair

BY PIERO LISSONI

p.30

Klip

BY VÍCTOR CARRASCO

p.51

Last Minute

BY PATRICIA URQUIOLA

ARMCHAIRS

p.63

Maarten Lounge Chair
BY VÍCTOR CARRASCO

p.73

Ace
BY JEAN MARIE-MASSAUD

p.67

Nagi
BY TOMOYA TABUCHI

p.79

Brix
BY KENSAKU OSHIRO

ARMCHAIRS

p.85

Wrapp

BY MARC KRUSIN

p.88

Fedele

BY VÍCTOR CARRASCO

p.82

Penta

BY TOAN NGUYEN

p.90

Colubi

BY RT DESIGN

BENCHES

p.102

Season Bench

BY PIERO LISSONI

p.172

Sistema

BY LIEVORE ALTHERR MOLINA

p.107

Trestle Bench

BY JOHN PAWSON

p.92

Common

BY NAOTO FUKASAWA

p.206

Platform

BY ARIK LEVY

p.104

Season Mini

BY PIERO LISSONI

SOFAS

p.201

Season Sofa
BY PIERO LISSONI

p.172

Sistema
BY LIEVORE ALTHERR MOLINA

p.215

Step
BY VINCENT VAN DUYSEN

p.222

Levitt
BY LUDOVICA + ROBERTO PALOMBA

p.90

Colubi
BY RT DESIGN

p.88

Fedele
BY VÍCTOR CARRASCO

p.206

Platform
BY ARIK LEVY

TABLES

p.128

Maarten Table
BY VÍCTOR CARRASCO

p.116

Trestle Table
BY JOHN PAWSON

p.156

Aspa
BY FR DESIGN

p.161

Stan
BY STUDIO VCCB

p.168

Eli
BY STUDIO VCCB

LOW TABLES

p.144

Serra
BY VÍCTOR CARRASCO

p.146

Tiers
BY PATRICIA URQUIOLA

p.150

Ryutaro
BY VÍCTOR CARRASCO

p.154

Shape
BY JORGE PENSI

p.98

Common
BY NAOTO FUKASAWA

p.152

Burin
BY PATRICIA URQUIOLA

LOW TABLES

p.148

Holy Day
BY JEAN-MARIE MASSAUD

ACCESSORIES

p.230

Pillows
BY ODOSDESIGN

p.228

Window
BY VINCENT VAN DUYSEN

The Viccarte collection edits artistic furniture pieces without pressure or market requirements.
Viccarte does not edit furniture pieces but sculptures so its use must be careful since they are not subject to tests of severe use, stability, etc. Therefore Viccarbe is not responsible for damages of the piece or to third parties for an improper use.

p.236

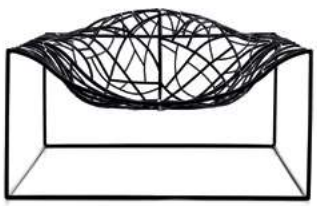

Ad-Hoc

BY JEAN-MARIE MASSAUD

p.238

Up in the air

BY RAMÓN ÚBEDA & OTTO CANALDA

p.240

Giro

BY PEDRO PAULO VENZON

p.242

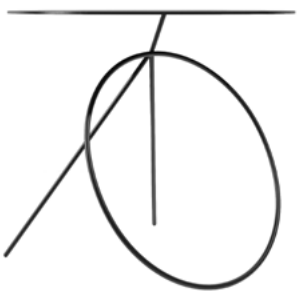

Bamba

BY PEDRO PAULO VENZON

Dear clients,

The following is a summary of the main updates to the 2018 pricelist of **viccarbe**.

BIFMA test for all new products. Remember that these quality tests are very important in order to avoid liability in case of an accident.

High flexibility and reduced delivery times compared to our competitors.

ALETA chair: Collection designed and created for use in both public spaces (restaurants, hotels or offices) and residential spaces. Composed of a chair and stool, the subtle details in the structure of the legs and the continuous movement towards its backrest reflects the personality and character of its designer, Jaime Hayon. Now available with the new swivelling wheeled base.

HEADREST for the ACE and NAGI armchairs and the SISTEMA sofa: Accessorie that adapt perfectly to the form of the armchair/sofa and enhance comfort for situations when prolonged rest is needed. It requires no installation and is available in all the fabrics of our collection.

COMMON benches: New models with greater height, which increases the possibilities for creating a multitude of spaces with this collection of benches and tables.

MAARTEN chair: Now also available with calibrated steel arms powder coated in thermoreinforced polyester with armrests in natural oak in the finishes of the collection.

MAARTEN lounge chair: New base that is ideal for lounges and singular collaborative spaces.

BURIN table with handle: New accessory available for the table. Handle made of high durability technical textiles.

SISTEMA SOFT sofa: Now also available with soft upholstered modules and arms. An extra comfortable interior and a more "wrinkled" and welcoming appearance.

SEASON sofá: Timeless and elegant upholstered modular sofa. The collection is comprised of different modules, which makes it very easy to intuitively create different compositions for collaborative zones.

MAARTEN, ALETA and KLIP swivelling stools available in two heights (counter and bar) that fit in perfectly with different atmospheres.

The following collections are no longer manufactured, although we have safety stock to continue supplying them for a reasonable period of time: Berry; Leg_In; Holy day (except 50 cm diameter table); Platform; the 72.5 cm swivelling chair-height stool from the Klip and Maarten families; the Paper, My Pillow and Join models from the Pillows family; and the Ad-hoc armchair with the orange finish.

In the **viccarte** collection, the main new products are:

GIRO table: Minimalist table with clean lines and simple forms. The oak bowl rests on a curved metal frame consisting of a circle and a line that form its legs.

BAMBA table: Table that perfectly represents the symbiosis of sculpture and balance. Composed of a metal tabletop and a base comprised of a circle and two metal rods that evokes the "slashed O", the emblem of Brazilian designer Pedro Paulo-Venzon.

On our website you can find all the latest information, news, projects etc, quickly and intuitively.
Browse our content and share what you see on social media or send a friend just the product they've been looking for.

2D / 3D files and REVIT families are available for all products, with total traceability to surf about our website and find related information (photos of each product with the option of printing or saving them >> 2D/3D plans >> major projects in which the product has been used >>information about the designer >> other products by the same designer for VICCARBE >> download the technical pdf with all this information and send it to a customer or a friend.)

Lots more content like VICCARTE, videos, prizes, new talents, etc., all of which we hope surprises you and helps to get to know us better.

CONSIDERATION

We inform you that VICCARBE doesn't have price list on paper, as a result of our environmental compromise ISO 14001.

We request you always check our prices and novelties totally updated with your commercial.

Taking care of our environment is looking after our future.

PROFESSIONAL

In **www.viccarbe.com** you can access to the 2D, 3D and REVIT families of all our products, to make it easier your decoration and interiors projects, in the _downloads area.

In the same way find the Catalogue, Certificates and samples.

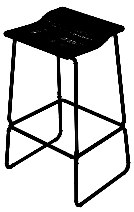

VICCARTE

The viccarte collection edits artistic furniture pieces without pressure or market requirements.

viccarte does not edit furniture pieces but sculptures so its use must be careful since they are not subject to tests of severe use, stability, etc. Therefore Viccarbe is not responsible for damages of the piece or to third parties for an improper use.

QUALITY

Viccarbe is certified by SGS in ISO 14001 and ISO 9001 as well as with the Symbol_C by the Furniture Institute of Technology (AIDIMA), which guarantees that the products have been tested.

GENERAL SALES CONDITIONS

Public pricelist valid from 1st January 2018.

To place an order implies to submit the following conditions that describe the process for proper ordering.

Price is per unit without taxes, unless any other information is stated. VICCARBE reserves the right to modify prices.

__HOW TO ORDER

All orders need to be received in written to e-mail export@viccarbe.com and must contain the following information:

A) Model name and reference
B) Finishes
C) Fabric reference
D) Quantity

It is not possible to cancel or modify an order after 48 hours of the order confirmation.

It is not allowed to order spare references as frames, legs, casters...

_MINIMUM ORDER

Orders under 1000 € net will have an extra transport charge of 100 € (without any extra discount)

_VICCARBE CUSTOM

We love personal solutions, and unique design, like diversity, is part of our company ethos.

Our project management team works with architects, interior designers and customers to help develop the design and create products customised to fit particular requirements for specific projects.

We are delighted to adapt our existing furniture to the needs and preferences of our customers.

Because we have total control over the production chain, we can respond to customer needs.

In the case of special orders, VICCARBE will not be liable to any customer or third party that files a claim against the customer in relation to the product included in said order, with the understanding that the characteristics of same correspond to customer requirements and have not been subjected to the usual company tests and controls. For such purposes, "special order" shall be understood to mean those products that differ from the forms, sizes or finishes included in the VICCARBE catalogue in force at the time the order is placed.

Orders will not be processed until confirmation and acceptance are received in writing for more than 100% of the total amount in advance (this amount is only required to confirm the customer's definitive acceptance of same, and after this point no modifications will be allowed).

By accepting this quote, the customer acknowledges that it is a special order and therefore exempts VICCARBE from all liability related to same, the pieces having been manufactured at the customer's request, diverging from the forms, sizes or finishes in the VICCARBE catalogue in force at the time of the order, with the commitment to maintain VICCARBE free of liability for any claim a third party might file against VICCARBE related to same.

The delivery time will depend on the difficulty of manufacturing the piece and will be indicated in writing with the quote. Nonetheless, it should be noted that this timeframe will be approximate, as any complication or unforeseen circumstances encountered in the manufacturing process could delay delivery.

GENERAL SALES CONDITIONS

_PAYMENT TERMS: SWIFT BANK TRANSFER

We should receive 100% the amount of the invoice, we can't accept to share the bank expenses.

First order: advanced payment by swift bank transfer (without any aditional discount).

Subsequents orders upon aproval of the factory. VICCARBE will only sell on credit if such sales are guaranteed by credit insurance.

Goods remain our property until invoice is fully paid.

_BANKING INFORMATION:

Payments need to be settled though:

SABADELL

SWIFT: BSABESBBXXX

IBAN: ES2300811304660001010805

_PRODUCTION TIME

Between 4 and 6 weeks after order confirmation. In any case, this is a just indicative and is not a binding for the manufacturer.

Loading date for special orders, large quantities or with C.O.M. needs to be confirmed case by case.

Orders with C.O.M. delivery time starts to run once the fabric is phisically in our warehouse.

To this term, you must consider transport time to your warehouse.

NOTICE: Any incident that occurs during transport must be reported within the 24 hours following reception. In the event of potential claims, the delivery note must state "merchandise pending inspection".

_TRANSPORT INCOTERMS: DDP (except Norway and Switzerland DDU)

In case of air shipments, the material used to protect the product will be charged to the customer.

_SPECIAL PACKAGING

Always under request and quotation to the factory.

© Brands, designs and commercial presentation protected. VICCARBE, 2018.

ABOUT THE PRODUCT

_LACQUERS on wood (Samples available on page 276).

GROUP 1

WHITE
RAL 9003

BLACK
RAL 9005

GREY
RAL 7004

GROUP 2

SAND
NCS3005Y50R

TOBACCO
RAL 8028

SMOKE GREY
RAL 1019

SILVER
RAL 9006

FLUORESCENT

ORANGE
RAL 2005
(only Shape)

GROUP 3

RED
RAL 3001

MUSTARD
RAL 1012

GREEN
RAL 6007

BLUE
RAL 5024

BRONZE

HIGH GLOSS (only Shape)

WHITE
RAL 9003

BLACK
RAL 9005

SMOKE GREY
RAL 1019

GREEN
NCS2060J7Y

Test certificates for the finishes: UNE 89401 (See the list of tests on page 282).

_STAINS on wood (Samples available on page 279).

MATT OAK

WENGE

COGNAC

ASH

_LACQUERS on metal (Samples available on page 278).

WHITE
RAL 9003

BLACK
RAL 9005

ALTEA BLUE
RAL 5000

SAND
RAL 1019

RED
RAL 3002
(only Ryutaro)

MUSTARD
RAL 1012
(only Serra)

FLUORESCENT ORANGE
RAL 2005

_Other TOPS (Samples available on page 280).

COMPACT LAMINATE (BLACK EDGE)
WHITE / BLACK

COMPACT LAMINATE (WHITE EDGE)
WHITE

LOW PRESSURE LAMINATE
WHITE / BLACK

HPL WITH MDF
WHITE / BLACK

HPL
WHITE / BLACK

_GRADED IN (Samples available on page 244).

The difference upholstery choices are divided in the following categories (It is always referred to plain fabric 140 cm wide):

viccarbe CONTRACT

G2: VELVET, VINYL.
G3: -.
G4: -.
G5: LEATHER.

viccarbe HOME

G2: GAUDI, MATISS, VULCANO.
G3: SIENA, LIDO, REGGIO.
G4: SHABBY, GUBBIO, RICO.
G5: VELOURS CAVIAR, SERA.

kvadrat

G2: UMAMI, METRIC, MESSENGER.
G3: REMIX 2, MAPLE, FIELD, CAVA 3*.
G4: CANVAS 2*, HERO, SAVANNA, FIORD.
G5: STEELCUT TRIO 3, HALLINGDAL 65, DIVINA MELANGE, DIVINA MD.

camira

G2: XTREME, URBAN, ADVANTAGE, CHATEAU, LUCIA, CITADEL (not available in the UK).
G3: MAIN LINE, AQUARIUS, BLAZER, NEXUS.

Gabriel

G2: MEDLEY, ATLANTIC, STEP, STEP MELANGE.
G3: FAME, GAJA 2C2.
G4: CRISP, GO CHECK.
G5: CAPTURE, FAME-HYBRID.

* fabrics not available for Wrapp armchair and Maarten chair and stool, Maarten lounge chair and Klip chair and stool with smooth upholstery.

The fabrics used are of the best quality in their category and subjected to prior testing. Even so, they cannot be formally guaranteed, particularly with respect to colour differences between the samples and products delivered at different times, as it is impossible to ensure a perfect match between the upholstery of an original composition and elements added later.

The footage indicated is based on a fabric width of 1.4 m.

In the case of leather upholstery (COL), the metres that figure in the price must be multiplied by 1.5 to calculate the necessary square metres.

The tolerance in the measurements of the upholstered elements can be of +/- 3 cm.

_C.O.M. | C.O.L.

They can be provided at the price indicated in the category for customer-supplied fabric (G1), but the fabrics must arrive at our factory with all shipping costs paid.

Any additional costs attributable to the customer-supplied fabric will be charged in the invoice.

Customer-supplied fabric notice:

- The customer-supplied fabric must be validated by the Viccarbe technical department before the item can enter production. Therefore you must send a 20x20 cm sample of each customer fabric.
- Please indicate the reference number of the order and product corresponding to the customer-supplied fabrics.
- The order cannot go into production until the fabric is received by Viccarbe.

_CUT OUT

VICCARBE offers the possibility of cutting tabletops to size. These custom cuts can be for accessories offered by Viccarbe and for external accessories.

To arrange this cutting of tabletops, it is necessary to submit a drawing prepared by the Viccarbe technical department, with the signature of the customer accepting the position of the cut. No order will be put into production without signed drawings.

_COMPOSITIONS

For orders that include the SISTEMA, SEASON SOFA or STEP sofa, it will be necessary to send a drawing of the desired composition.

_FIRE RETARDANT FOAM CERTIFICATES

Especial certificates like CAL117, CAL133, etc... are available upon request. VICCARBE will inform you about the price increase and procedure.

_ABOUT THE FINISHES

Any model not shown in this price list is discontinued.

To match the fabric or wood tonality of articles manufactured in different periods is not possible technically. The buyer accepts the tolerance when placing the order.

VICCARBE reserves the right to modify dimensions, assembling, materials or tonalities to improve the products without notice.

_WARRANTY 5 YEARS

VICCARBE guarantees the product quality throughout all its manufacturing process and all products components when have had an adequate use for their specific characteristics.

Defects caused by negligence, knocks, inadequate cleaning products or climatic changes are not covered, neither changes caused by the environmental conditions.

The guarantee is valid for 5 years (excluding the products in the Viccarte collection, for which it is 2 years) from the date of the invoice of VICCARBE.

During the term of the guarantee, the holder thereof shall be entitled to at least:

a) Total repair free of charge of the manufacturing defects and of the damaged resulting therefore.

b) In the event of unsatisfactory repairing and the object failed to be in optimum condition to fulfill the use on which it was indented, the holder of the guarantee shall be entitled to either the replacement of the object purchased by another product of identical characteristics or a full price refund.

Aleta

BY JAIME HAYON

Aleta
BY JAIME HAYON

ALSIME - METAL BASE CHAIR

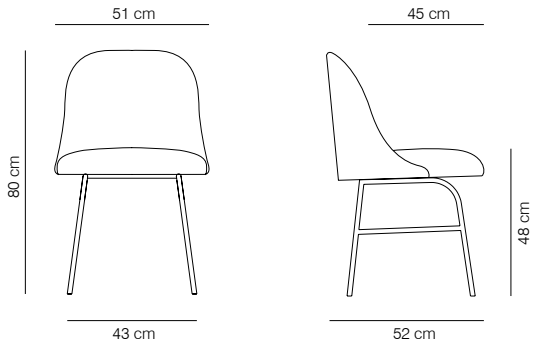

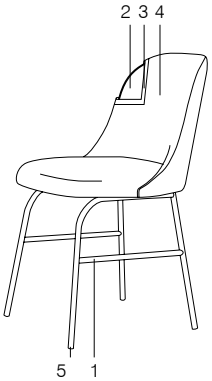

1- Calibrated steel structure powder coated in thermoreinforced polyester in white, black, sand or altea blue.
2- Moulded plywood seat and backrest.
3- Expanded polyuretane foam.
4- Fabric or leather.
5- Black or white injection polypropylene glides.

Test certificates: ANSI BIFMA X5.4-2012.

Needed fabric for material 1.40 m wide:
ALSIME: 1 Colour: total 1.4 m
2 Colours: seat 0.9 m
backrest 1.3 m

This collection offers the possibility of two-colour upholstery, with one colour for the seat and another for the back. In this case, always calculate based on the price of the fabric in the higher category.

CODE	MODEL	PACKAGING	WEIGHT (kg)	FINISHES		PUBLIC PRICE (Fire Re. Foam)	PUBLIC PRICE
				STRUCTURE	UPHOLSTERY		
ALSIME-1	METAL BASE CHAIR	59x53x89 (0.28) x1	12.8	black, white, sand or altea blue	COM / COL	512 €	497 €
ALSIME-2					G2	512 €	497 €
ALSIME-3					G3	589 €	572 €
ALSIME-4					G4	678 €	658 €
ALSIME-5					G5	784 €	761 €

OPTIONS FOR FINISHES:

STRUCTURE: black, white, sand or altea blue.

Aleta

BY JAIME HAYON

ALSIMA - WOODEN BASE CHAIR

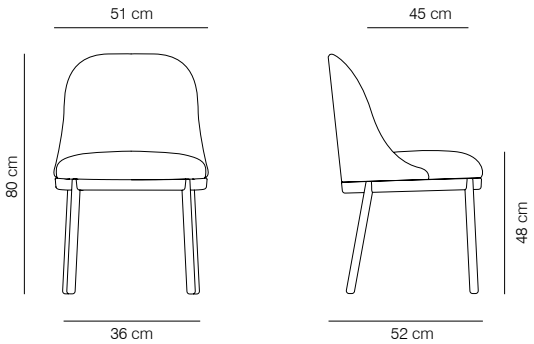

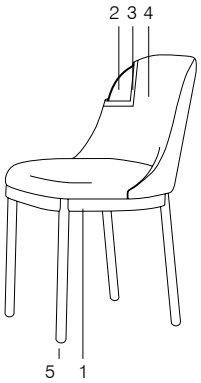

1- Base in solid oak wood stained with the finishes of our collection.
2- Moulded plywood seat and backrest.
3- Expanded polyuretane foam.
4- Fabric or leather.
5- Plastic glides with or without felt.

Needed fabric for material 1.40 m wide:
ALSIMA: 1 Colour: total 1.4 m
2 Colours: seat 0.9 m
backrest 1.3 m

This collection offers the possibility of two-colour upholstery, with one colour for the seat and another for the back. In this case, always calculate based on the price of the fabric in the higher category.

Note: Available for the wooden base chair, felt glides. If not indicated, the chair will be produced with plastic glides.

CODE	MODEL	PACKAGING	WEIGHT (kg)	FINISHES		PUBLIC PRICE (Fire Re. Foam)	PUBLIC PRICE
				STRUCTURE	UPHOLSTERY		
ALSIMA-1	WOODEN BASE CHAIR	59x53x89 (0.28) x1	13.4	matt oak, cognac, ash and wenge	COM / COL	725 €	704 €
ALSIMA-2					G2	725 €	704 €
ALSIMA-3					G3	787 €	765 €
ALSIMA-4					G4	872 €	847 €
ALSIMA-5					G5	1.003 €	974 €

OPTIONS FOR FINISHES:

STRUCTURE: matt oak, cognac, ash and wenge.

Note: Due to the fact that the wood used is natural, the finish may vary.

Aleta

BY JAIME HAYON

ALSIG - SWIVEL BASE CHAIR

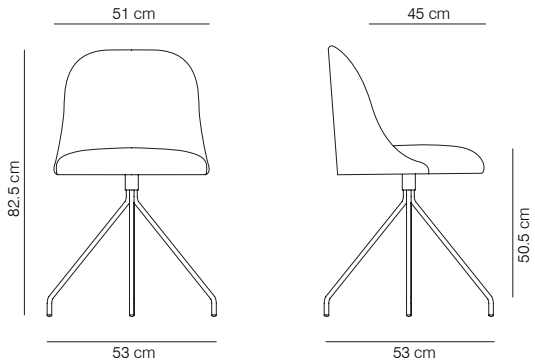

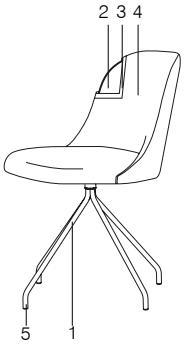

1- Calibrated steel swivel structure powder coated in thermoreinforced polyester in white, black, sand or altea blue.
2- Moulded plywood seat and backrest.
3- Expanded polyuretane foam.
4- Fabric or leather.
5- Black or white injection polypropylene glides.

Needed fabric for material 1.40 m wide:
ALSIG | ALSIBR: 1 Colour: total 1.4 m
2 Colours: seat 0.9 m
backrest 1.3 m

ALSIBR - CASTER BASE CHAIR

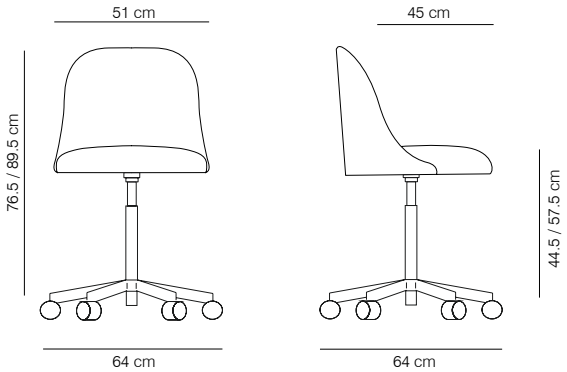

1- Aluminum swivel base powder coated in white or black (high gloss), height adjustment system and soft casters.
2- Moulded plywood seat and backrest.
3- Expanded polyuretane foam.
4- Fabric or leather.

This collection offers the possibility of two-colour upholstery, with one colour for the seat and another for the back. In this case, always calculate based on the price of the fabric in the higher category.

CODE	MODEL	PACKAGING	WEIGHT (kg)	FINISHES		PUBLIC PRICE (Fire Re. Foam)	PUBLIC PRICE
				STRUCTURE	UPHOLSTERY		
ALSIG-1	SWIVEL BASE CHAIR	55x67x87 (0.32) x1	14.3	black, white, sand or altea blue	COM / COL	666 €	647 €
ALSIG-2					G2	666 €	647 €
ALSIG-3					G3	766 €	744 €
ALSIG-4					G4	880 €	855 €
ALSIG-5					G5	1.019 €	989 €
ALSIBR-1	CASTERS BASE CHAIR	55x67x87 (0.32) x1	13.4	black or white	COM / COL	733 €	712 €
ALSIBR-2					G2	733 €	712 €
ALSIBR-3					G3	843 €	818 €
ALSIBR-4					G4	969 €	941 €
ALSIBR-5					G5	1.121 €	1.088 €

OPTIONS FOR FINISHES:

CASTERS BASE: white with chrome tubing or black with black tubing.
SWIVEL BASE: white, black, sand or altea blue.

Aleta

BY JAIME HAYON

ALTA - STOOL

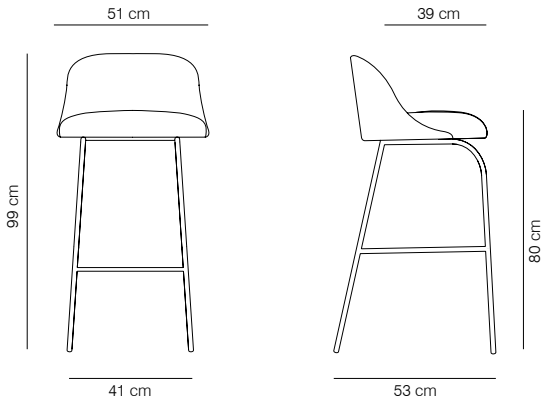

ALTAH - HIGH STOOL

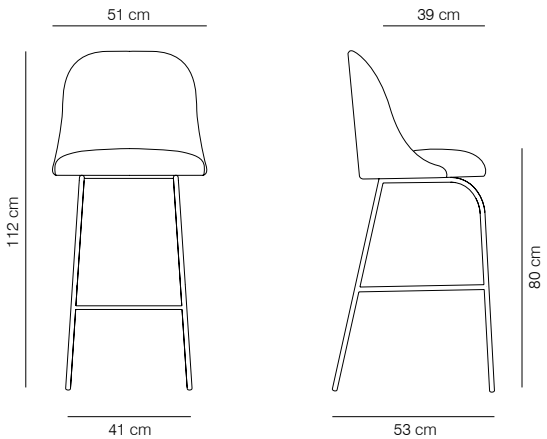

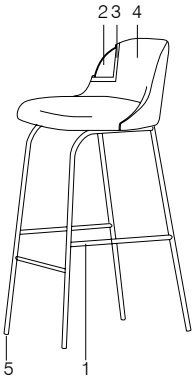

1- Calibrated steel structure powder coated in thermoreinforced polyester in white, black, sand or altea blue, and footrest in stainless steel.
2- Moulded plywood seat and backrest.
3- Expanded polyuretane foam.
4- Fabric or leather.
5- Black or white injection polypropylene glides.

Test certificates: ANSI BIFMA X5.4-2012

Needed fabric for material 1.40 m wide:

ALTA:	1 Colour:	total 1.2 m
	2 Colours:	seat 0.8 m
		backrest 1.1 m
ALTAH:	1 Colour:	total 1.3 m
	2 Colours:	seat 0.8 m
		backrest 1.3 m

This collection offers the possibility of two-colour upholstery, with one colour for the seat and another for the back. In this case, always calculate based on the price of the fabric in the higher category.

CODE	MODEL	PACKAGING	WEIGHT (kg)	FINISHES		PUBLIC PRICE (Fire Re. Foam)	PUBLIC PRICE
				STRUCTURE	UPHOLSTERY		
ALTA-1	STOOL	55x67x117 (0.42) x1	10.8	black, white, sand or altea blue	COM / COL	624 €	606 €
ALTA-2					G2	624 €	606 €
ALTA-3					G3	718 €	698 €
ALTA-4					G4	827 €	803 €
ALTA-5					G5	959 €	931 €
ALTAH-1	HIGH STOOL		12.3		COM / COL	676 €	656 €
ALTAH-2					G2	676 €	656 €
ALTAH-3					G3	773 €	750 €
ALTAH-4					G4	886 €	860 €
ALTAH-5					G5	1.015 €	985 €

OPTIONS FOR FINISHES:

STRUCTURE: black, white, sand or altea blue.

Aleta

BY JAIME HAYON

ALTACO - SWIVEL COUNTER STOOL

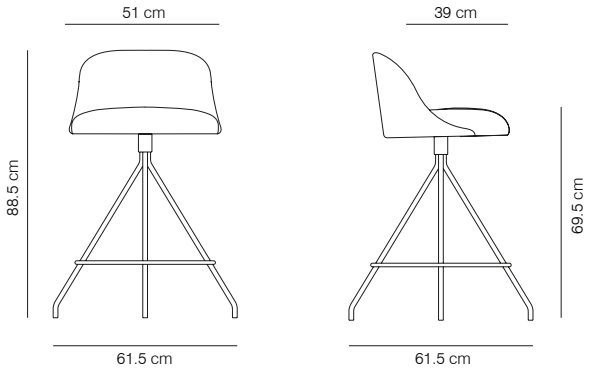

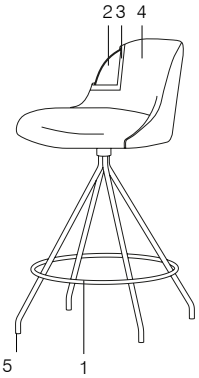

1- Calibrated steel swivel structure powder coated in thermoreinforced polyester in white, black, sand or altea blue and footrest in stainless steel.
2- Moulded plywood seat and backrest.
3- Expanded polyuretane foam.
4- Fabric or leather.
5- Black or white injection polypropylene glides.

Needed fabric for material 1.40 m wide:

ALTACO:	1 Colour:	total 1.2 m
	2 Colours:	seat 0.8 m
		backrest 1.1 m
ALTACOH:	1 Colour:	total 1.3 m
	2 Colours:	seat 0.8 m
		backrest 1.3 m

This collection offers the possibility of two-colour upholstery, with one colour for the seat and another for the back. In this case, always calculate based on the price of the fabric in the higher category.

ALTACOH - HIGH SWIVEL COUNTER STOOL

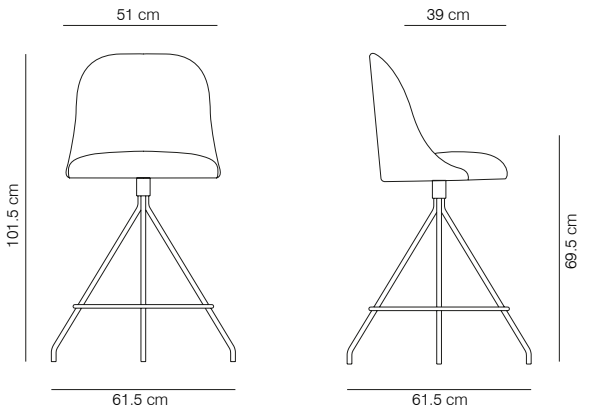

CODE	MODEL	PACKAGING	WEIGHT (kg)	FINISHES		PUBLIC PRICE (Fire Re. Foam)	PUBLIC PRICE
				STRUCTURE	UPHOLSTERY		
ALTACO-1	SWIVEL COUNTER STOOL	55X67X114 (0.42) x1	11.5	black, white, sand or altea blue	COM / COL	767 €	745 €
ALTACO-2					G2	767 €	745 €
ALTACO-3					G3	882 €	857 €
ALTACO-4					G4	1.015 €	985 €
ALTACO-5					G5	1.167 €	1.133 €
ALTACOH-1	HIGH SWIVEL COUNTER STOOL	55X67X114 (0.42) x1	13.0		COM / COL	819 €	795 €
ALTACOH-2					G2	819 €	795 €
ALTACOH-3					G3	942 €	914 €
ALTACOH-4					G4	1.083 €	1.051 €
ALTACOH-5					G5	1.245 €	1.209 €

OPTIONS FOR FINISHES:

STRUCTURE: black, white, sand or altea blue.

Aleta

BY JAIME HAYON

ALTABAR - SWIVEL BAR STOOL

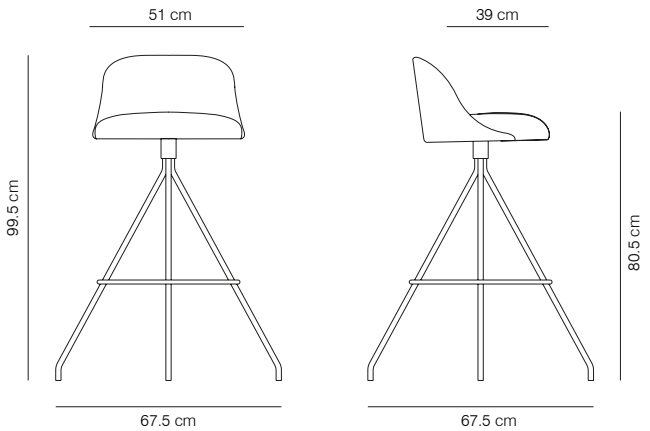

1- Calibrated steel swivel structure powder coated in thermoreinforced polyester in white, black, sand or altea blue and footrest in stainless steel.
2- Moulded plywood seat and backrest.
3- Expanded polyuretane foam.
4- Fabric or leather.
5- Black or white injection polypropylene glides.

ALTABARH - HIGH SWIVEL BAR STOOL

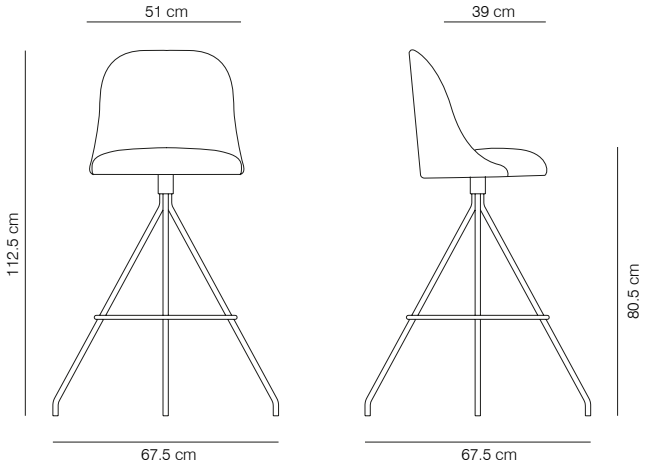

Para metraje de ancho de tela 1.40 m:

ALTABAR:	1 Colour:	total 1.2 m
	2 Colours:	seat 0.8 m
		backrest 1.1 m
ALTABARH:	1 Colour:	total 1.3 m
	2 Colours:	seat 0.8 m
		backrest 1.3 m

This collection offers the possibility of two-colour upholstery, with one colour for the seat and another for the back. In this case, always calculate based on the price of the fabric in the higher category.

CODE	MODEL	PACKAGING	WEIGHT (kg)	FINISHES		PUBLIC PRICE (Fire Re. Foam)	PUBLIC PRICE
				STRUCTURE	UPHOLSTERY		
ALTABAR-1	SWIVEL BAR STOOL	55X67X114 (0.42) x1	12.1	black, white, sand or altea blue	COM / COL	767 €	745 €
ALTABAR-2					G2	767 €	745 €
ALTABAR-3					G3	882 €	857 €
ALTABAR-4					G4	1.015 €	985 €
ALTABAR-5					G5	1.167 €	1.133 €
ALTABARH-1	HIGH SWIVEL BAR STOOL	55X67X114 (0.42) x1	13.6		COM / COL	819 €	795 €
ALTABARH-2					G2	819 €	795 €
ALTABARH-3					G3	942 €	914 €
ALTABARH-4					G4	1.083 €	1.051 €
ALTABARH-5					G5	1.245 €	1.209 €

OPTIONS FOR FINISHES:

STRUCTURE: black, white, sand or altea blue.

Klip

BY VICTOR CARRASCO

Klip

BY VICTOR CARRASCO

Seat in stained curved oak plywood or curved beech lacquered in the finishes in our collection, upholstered in different versions (smooth, stitching with lines and soft) or with cushion upholstered with fabric or leather.

Perfect for home and contract use, stackable up to 10 units for non-upholstered version or stackable up to 4 units for upholstered versions.
Its name is a reference to the slot in its back, which serves both as a handle for moving it about easily and as a support on which to hang handbags and the like.

KLIP is available in a wide variety of bases and seats to adapt to diverse environments.
Totally in line with its original design we have made arms in lacquered steel tubing for our successful Klip chair.

We use FSC certified wood.

Test certificates: UNE EN 16139:13 and ANSI BIFMA X5.1-2011 (four legs base chair), and ANSI BIFMA X5.1-2011 (four legs base with arms).

SEAT OPTIONS

STAINED / LACQUERED

Curved oak plywood stained or curved beech plywood lacquered in the finishes in our collection.

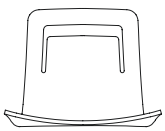

STAINED / LACQUERED WITH HANDLE

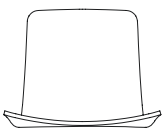

STAINED /LACQUERED WITHOUT HANDLE

UPHOLSTERY

Curved beech plywood covered by expanded polyurethane foam.

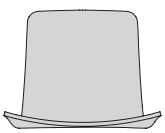

SMOOTH UPHOLSTERY

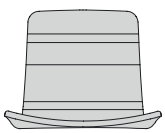

STITCHING WITH LINES UPHOLSTERY

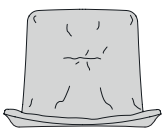

SOFT UPHOLSTERY

COMBINED

Curved oak plywood stained or curved beech plywood lacquered in the finishes in our collection, with a cushion.

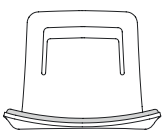

STAINED /LACQUERED WITH CUSHION AND HANDLE

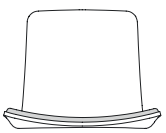

STAINED /LACQUERED WITH CUSHION AND WITHOUT HANDLE

BASE OPTIONS

FOUR LEGS BASE

Calibrated steel structure powder coated in thermoreinforced polyester in white, black, sand, altea blue or fluorescent orange.

x10 Stackable up to 10 units.

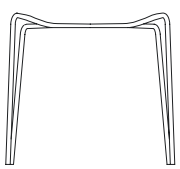

SWIVEL BASE

Calibrated steel swivel structure powder coated in thermoreinforced polyester in white, black, sand, altea blue or fluorescent orange.

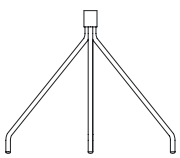

FOUR STAR SWIVEL BASE

Calibrated steel swivel structure powder coated in thermoreinforced polyester in white, black, sand, altea blue or fluorescent orange. Four star aluminium base.

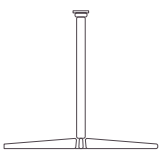

CASTERS BASE

Aluminum swivel base powder coated in white or black (high gloss), height adjustment system and soft casters.

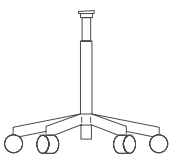

NEW

SWIVEL COUNTER STOOL

Calibrated steel swivel structure powder coated in thermoreinforced polyester in white, black, sand, altea blue or fluorescent orange and footrest in stainless steel.

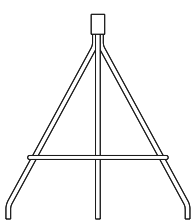

NEW

SWIVEL BAR STOOL

Calibrated steel swivel structure powder coated in thermoreinforced polyester in white, black, sand, altea blue or fluorescent orange and footrest in stainless steel.

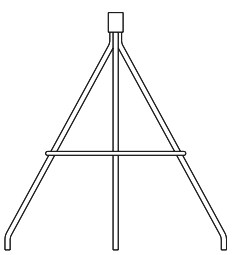

Klip

BY VICTOR CARRASCO

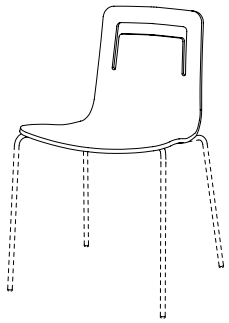

STAINED / LACQUERED WITH HANDLE

Curved oak plywood stained or curved beech plywood lacquered in the finishes in our collection, with the handle in the back.

We use FSC certified wood.

No more than 10 units of the four leg base should be stacked up. x10
The swivel base chair, the four star base chair, the casters base chair and the swivel stools are not stackable.

Calibrated steel arms powder coated in thermoreinforced polyester in black, white, sand, altea blue or fluorescent orange.
Available for all types of bases (See page 50).

Maximum weight supported by the handle: 15 kg.

KL4P_R - FOUR LEGS BASE WITH HANDLE / STAINED OR LACQUERED

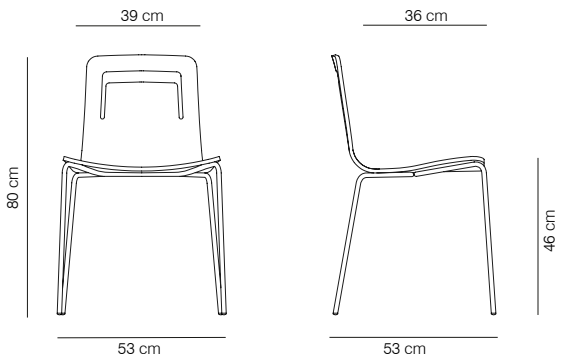

KLG_R - SWIVEL BASE WITH HANDLE / STAINED OR LACQUERED

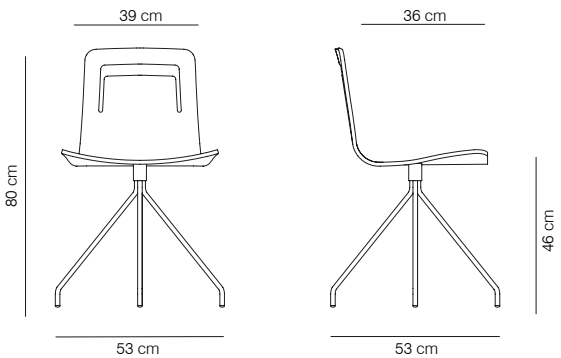

KL4PU_R - FOUR STAR SWIVEL BASE WITH HANDLE / STAINED OR LACQUERED

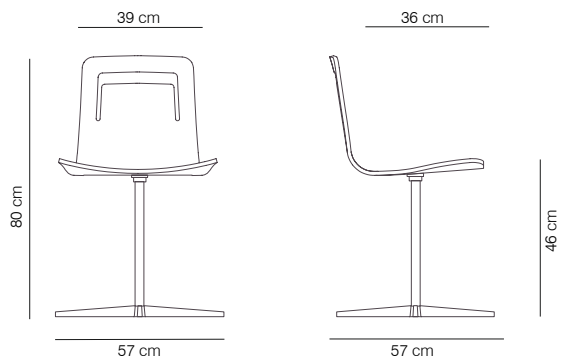

KLBR_R - CASTERS BASE WITH HANDLE / STAINED OR LACQUERED

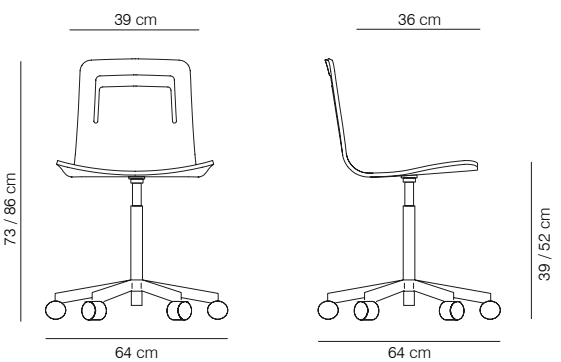

KLTCO_R - SWIVEL COUNTER STOOL WITH HANDLE / STAINED OR LACQUERED

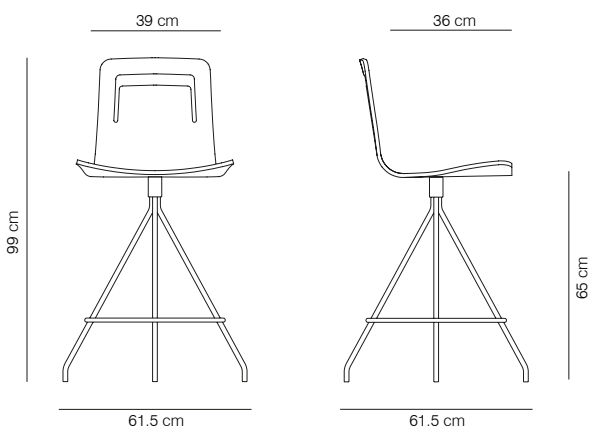

KLTBAR_R - SWIVEL BAR STOOL WITH HANDLE / STAINED OR LACQUERED

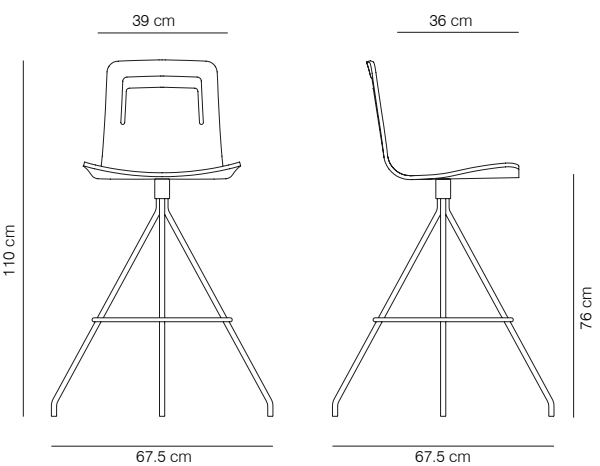

Klip

BY VICTOR CARRASCO

CODE	MODEL	PACKAGING	WEIGHT (kg)	FINISHES			PUBLIC PRICE
				STRUCTURE	SEAT		
KL4PROR	FOUR LEGS BASE / STAINED OR LACQUERED WITH HANDLE	67x55X102 (0.38) 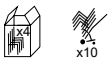 Minimun order is 4 units	10.2 /unit (26)	white, black, sand, altea blue or orange fluorescent	stained	matt oak, cognac, ash and wenge	193 €
KL4PTXR					lacquered	white, black and grey	216 €
						sand, tobacco, smoke grey and silver	227 €
						red, mustard, green, blue and bronze	239 €
KLGROR	SWIVEL BASE / STAINED OR LACQUERED WITH HANDLE	67x55X88 (0.33)	13.6	white, black, sand, altea blue or orange fluorescent	stained	matt oak, cognac, ash and wenge	286 €
KLGTXR					lacquered	white, black and grey	319 €
						sand, tobacco, smoke grey and silver	337 €
						red, mustard, green, blue and bronze	354 €
KL4PUROR	FOUR STAR BASE / STAINED OR LACQUERED WITH HANDLE	55X67X88 (0.33)	10.6	white, black, sand, altea blue or orange fluorescent	stained	matt oak, cognac, ash and wenge	286 €
KL4PUTXR					lacquered	white, black and grey	319 €
						sand, tobacco, smoke grey and silver	337 €
						red, mustard, green, blue and bronze	354 €
KLBRROR	CASTERS BASE / STAINED OR LACQUERED WITH HANDLE	66X65X77 (0.33)	12.5	white or black	stained	matt oak, cognac, ash and wenge	314 €
KLBRTXR					lacquered	white, black and grey	351 €
						sand, tobacco, smoke grey and silver	371 €
						red, mustard, green, blue and bronze	390 €
KLTCOROR	SWIVEL COUNTER STOOL / STAINED OR LACQUERED WITH HANDLE	55X67X114 (0.42)	17.2	white, black, sand, altea blue or orange fluorescent	stained	matt oak, cognac, ash and wenge	450 €
KLTCOTXR					lacquered	white, black and grey	487 €
						sand, tobacco, smoke grey and silver	501 €
						red, mustard, green, blue and bronze	515 €
KLTBARROR	SWIVEL BAR STOOL / STAINED OR LACQUERED WITH HANDLE	55X67X114 (0.42)	17.8	white, black, sand, altea blue or orange fluorescent	stained	matt oak, cognac, ash and wenge	450 €
KLTBARTXR					lacquered	white, black and grey	487 €
						sand, tobacco, smoke grey and silver	501 €
						red, mustard, green, blue and bronze	515 €

OPTIONS FOR FINISHES:

STRUCTURE: white, black, sand, altea blue or orange fluorescent (except casters base).
SEAT: - STAINED: matt oak, cognac, wenge and ash stain.
- LACQUERED (open pore, microtexturized): black.
- LACQUERED (open pore): COLORS 1: white and grey.
COLORS 2: sand, tobacco, smoke grey and silver.
COLORS 2: red, mustard, green, blue and bronze.

NB: Due to the fact that the wood used is natural, the finish may vary.

Klip

BY VICTOR CARRASCO

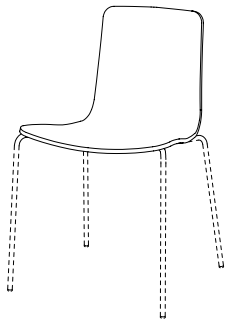

STAINED / LACQUERED WITHOUT HANDLE

Curved oak plywood stained or curved beech plywood lacquered in the finishes in our collection, without the handle in the back.
We use FSC certified wood.

No more than 10 units of the four leg base should be stacked up.

The swivel base chair, the four star base chair, the casters base chair and the swivel stools are not stackable.

Calibrated steel arms powder coated in thermoreinforced polyester in black, white, sand, altea blue or fluorescent orange.
Available for all types of bases (See page 50).

KL4P - FOUR LEGS BASE WITHOUT HANDLE / STAINED OR LACQUERED

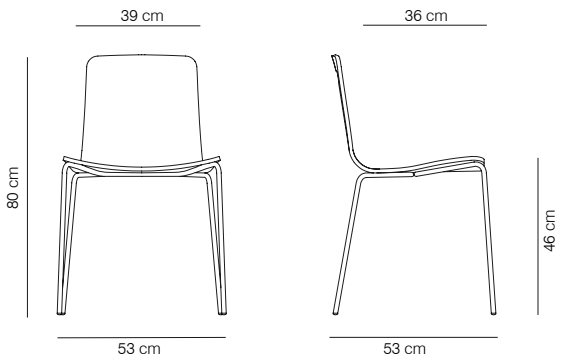

KLG - SWIVEL BASE WITHOUT HANDLE / STAINED OR LACQUERED

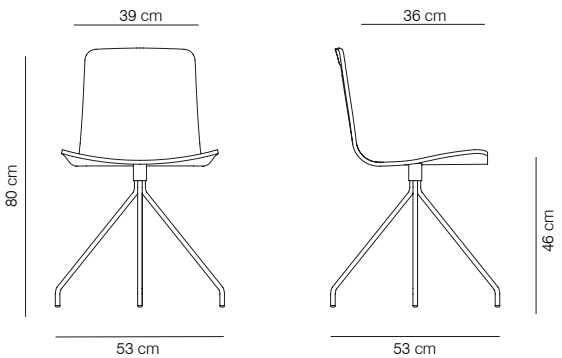

KL4PU - FOUR STAR SWIVEL BASE WITHOUT HANDLE / STAINED OR LACQUERED

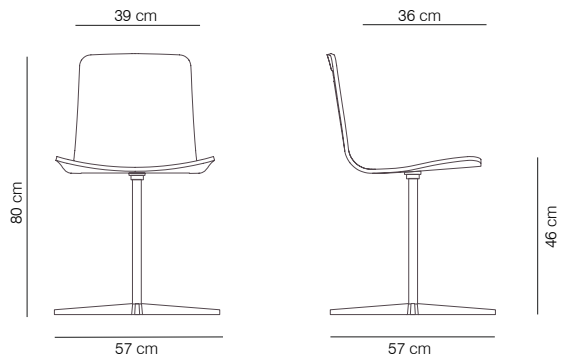

KLBR - CASTERS BASE WITHOUT HANDLE / STAINED OR LACQUERED

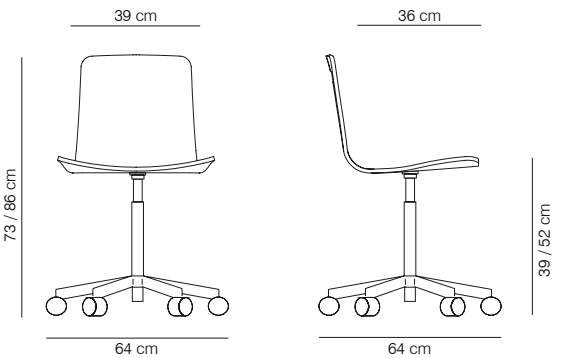

KLTCO - SWIVEL COUNTER STOOL WITHOUT HANDLE / STAINED OR LACQUERED

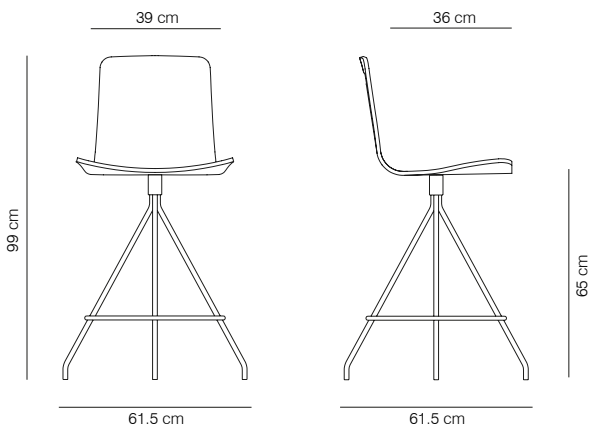

KLTBAR - SWIVEL BAR STOOL WITHOUT HANDLE / STAINED OR LACQUERED

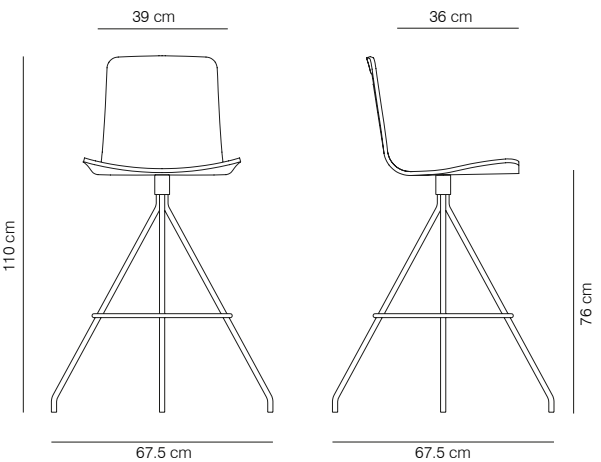

Klip

BY VICTOR CARRASCO

CODE	MODEL	PACKAGING	WEIGHT (kg)	FINISHES			PUBLIC PRICE
				STRUCTURE	SEAT		
KL4PRO	FOUR LEGS BASE / STAINED OR LACQUERED WITHOUT HANDLE	67x55X102 (0.38) Minimun order is 4 units	10.2 /unit (26)	white, black, sand, altea blue or orange fluorescent	stained	matt oak, cognac, ash and wenge	193 €
KL4PTX					lacquered	white, black and grey	216 €
						sand, tobacco, smoke grey and silver	227 €
						red, mustard, green, blue and bronze	239 €
KLGRO	SWIVEL BASE / STAINED OR LACQUERED WITHOUT HANDLE	67x55X88 (0.33)	13.6	white, black, sand, altea blue or orange fluorescent	stained	matt oak, cognac, ash and wenge	286 €
KLGTX					lacquered	white, black and grey	319 €
						sand, tobacco, smoke grey and silver	337 €
						red, mustard, green, blue and bronze	354 €
KL4PURO	FOUR STAR BASE / STAINED OR LACQUERED WITHOUT HANDLE	67x55X88 (0.33)	9.1	white, black, sand, altea blue or orange fluorescent	stained	matt oak, cognac, ash and wenge	286 €
KL4PUTX					lacquered	white, black and grey	319 €
						sand, tobacco, smoke grey and silver	337 €
						red, mustard, green, blue and bronze	354 €
KLBRRO	CASTERS BASE / STAINED OR LACQUERED WITHOUT HANDLE	66X65X77 (0.33)	12.5	white or black	stained	matt oak, cognac, ash and wenge	314 €
KLBRTX					lacquered	white, black and grey	351 €
						sand, tobacco, smoke grey and silver	371 €
						red, mustard, green, blue and bronze	390 €
KLTCORO	SWIVEL COUNTER STOOL / STAINED OR LACQUERED WITHOUT HANDLE	55X67X114 (0.42)	17.2	white, black, sand, altea blue or orange fluorescent	stained	matt oak, cognac, ash and wenge	450 €
KLTCOTX					lacquered	white, black and grey	487 €
						sand, tobacco, smoke grey and silver	501 €
						red, mustard, green, blue and bronze	515 €
KLTBARRO	SWIVEL BAR STOOL / STAINED OR LACQUERED WITHOUT HANDLE	55X67X114 (0.42)	17.8	white, black, sand, altea blue or orange fluorescent	stained	matt oak, cognac, ash and wenge	450 €
KLTBARTX					lacquered	white, black and grey	487 €
						sand, tobacco, smoke grey and silver	501 €
						red, mustard, green, blue and bronze	515 €

OPTIONS FOR FINISHES:

STRUCTURE: white, black, sand, altea blue or orange fluorescent (except casters base).
SEAT: - STAINED: matt oak, cognac, wenge and ash stain.
- LACQUERED (open pore, microtexturized): black.
- LACQUERED (open pore): COLORS 1: white and grey.
COLORS 2: sand, tobacco, smoke grey and silver.
COLORS 2: red, mustard, green, blue and bronze.

NB: Due to the fact that the wood used is natural, the finish may vary.

Klip

BY VICTOR CARRASCO

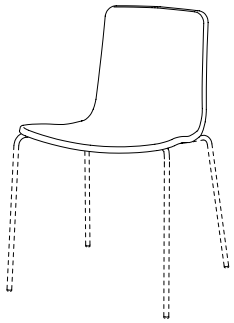

SMOOTH UPHOLSTERY

Plywood natural beech chair covered by expanded polyurethane foam, smooth upholstery.

We use FSC certified wood.

No more than 4 units of the four leg base should be stacked up.

The swivel base chair, the four star base chair, the casters base chair and the swivel stools are not stackable.
Don't stack for long time as upholstery can be marked and damage. We recommend the use of stacking protector if you want to stack upholstered chairs (See page 50).

Calibrated steel arms powder coated in thermoreinforced polyester in black, white, sand, altea blue or fluorescent orange.
Available for all types of bases (See page 50).

Needed fabric for material 1.40 m wide: 1 m

KL4PT - FOUR LEGS BASE / SMOOTH UPHOLSTERY

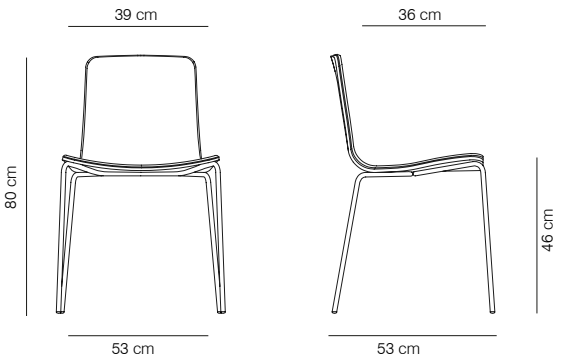

KLGT - SWIVEL BASE / SMOOTH UPHOLSTERY

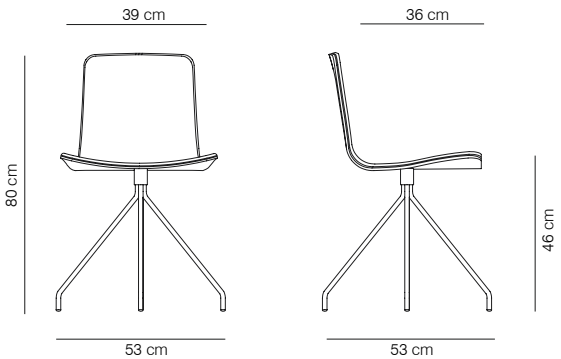

KL4PUT - FOUR STAR SWIVEL BASE / SMOOTH UPHOLSTERY

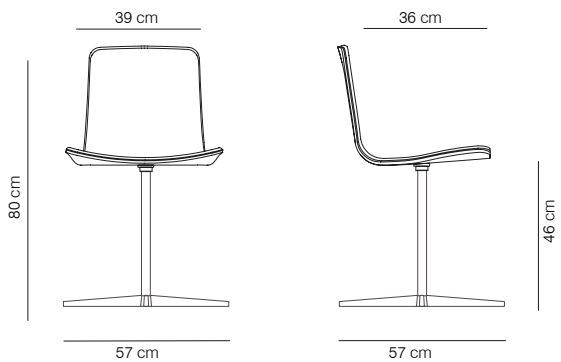

KLBRT - CASTERS BASE / SMOOTH UPHOLSTERY

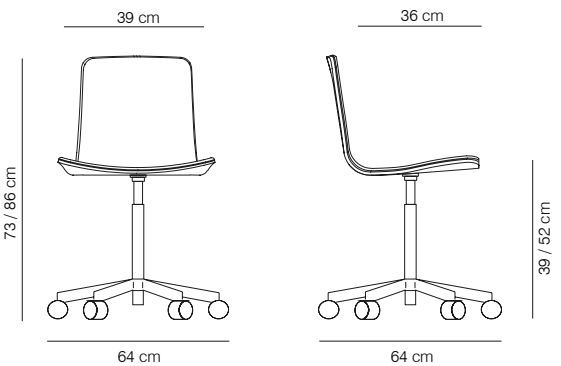

KLTCOT - SWIVEL COUNTER STOOL / SMOOTH UPHOLSTERY

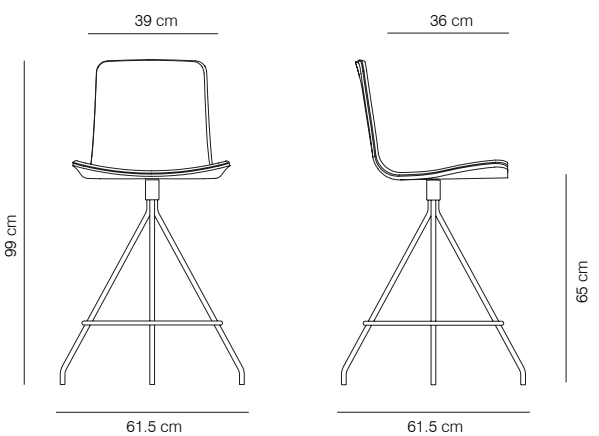

KLTBART - SWIVEL BAR STOOL / SMOOTH UPHOLSTERY

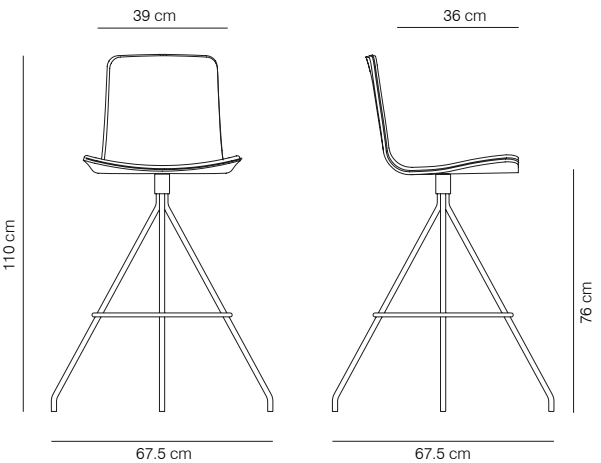

Klip

BY VICTOR CARRASCO

CODE	MODEL	PACKAGING	WEIGHT (kg)	FINISHES		PUBLIC PRICE (Fire Re. Foam	PUBLIC PRICE
				STRUCTURE	UPHOLSTERY		
KL4PT-1	FOUR LEGS BASE / SMOOTH UPHOLSTERY	67x55X102 (0.38) 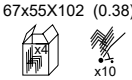 Minimun order is 4 units	10.2 /unit (26)	white, black, sand, altea blue or orange fluorescent	COM / COL	274 €	266 €
KL4PT-2					G2	274 €	266 €
KL4PT-3					G3	315 €	306 €
KL4PT-4					G4	369 €	359 €
KL4PT-5					G5	437 €	425 €
KLGT-1	SWIVEL BASE / SMOOTH UPHOLSTERY	67x55X88 (0.33)	13.6	white, black, sand, altea blue or orange fluorescent	COM / COL	387 €	375 €
KLGT-2					G2	387 €	375 €
KLGT-3					G3	446 €	433 €
KLGT-4					G4	522 €	507 €
KLGT-5					G5	579 €	562 €
KL4PUT-1	FOUR STAR SWIVEL BASE / SMOOTH UPHOLSTERY	67x55X88 (0.33)	9.1	white, black, sand, altea blue or orange fluorescent	COM / COL	387 €	375 €
KL4PUT-2					G2	387 €	375 €
KL4PUT-3					G3	446 €	433 €
KL4PUT-4					G4	522 €	507 €
KL4PUT-5					G5	579 €	562 €
KLBRT-1	CASTERS BASE / SMOOTH UPHOLSTERY	66X65X77 (0.33)	12.5	white or black	COM / COL	427 €	415 €
KLBRT-2					G2	427 €	415 €
KLBRT-3					G3	478 €	464 €
KLBRT-4					G4	542 €	526 €
KLBRT-5					G5	624 €	606 €
KLTCOT-1	SWIVEL COUNTER STOOL / SMOOTH UPHOLSTERY	55X67X114 (0.42)	17.2	white, black, sand, altea blue or orange fluorescent	COM / COL	550 €	534 €
KLTCOT-2					G2	550 €	534 €
KLTCOT-3					G3	607 €	590 €
KLTCOT-4					G4	682 €	662 €
KLTCOT-5					G5	778 €	755 €
KLTBART-1	SWIVEL BAR STOOL / SMOOTH UPHOLSTERY	55X67X114 (0.42)	17.8	white, black, sand, altea blue or orange fluorescent	COM / COL	550 €	534 €
KLTBART-2					G2	550 €	534 €
KLTBART-3					G3	607 €	590 €
KLTBART-4					G4	682 €	662 €
KLTBART-5					G5	778 €	755 €

OPTIONS FOR FINISHES:

STRUCTURE: white, black, sand, altea blue or orange fluorescent (except casters base)

Klip

BY VICTOR CARRASCO

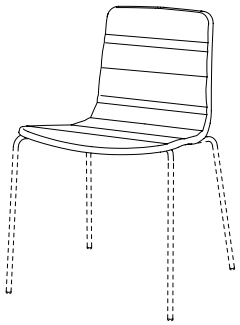

STITCHING WITH LINES UPHOLSTERY

Plywood natural beech chair covered by expanded polyurethane foam, stitching with lines upholstery.

We use FSC certified wood.

No more than 4 units of the four leg base should be stacked up. x4

The swivel base chair, the four star base chair, the casters base chair and the swivel stools are not stackable.

Don't stack for long time as upholstery can be marked and damage. We recommend the use of stacking protector if you want to stack upholstered chairs (See page 50).

Calibrated steel arms powder coated in thermoreinforced polyester in black, white, sand, altea blue or fluorescent orange.
Available for all types of bases (See page 50).

Needed fabric for material 1.40 m wide: 1 m

KL4PB - FOUR LEGS BASE / STITCHING WITH LINES UPHOLSTERY

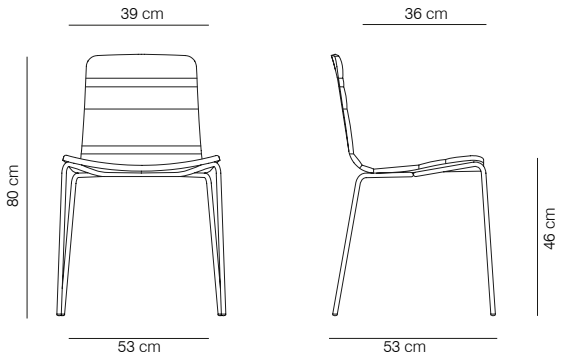

KLGB - SWIVEL BASE / STITCHING WITH LINES UPHOLSTERY

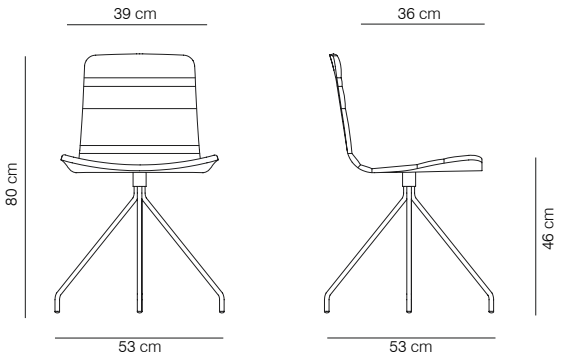

KL4PUB - FOUR STAR SWIVEL BASE / STITCHING WITH LINES UPHOLSTERY

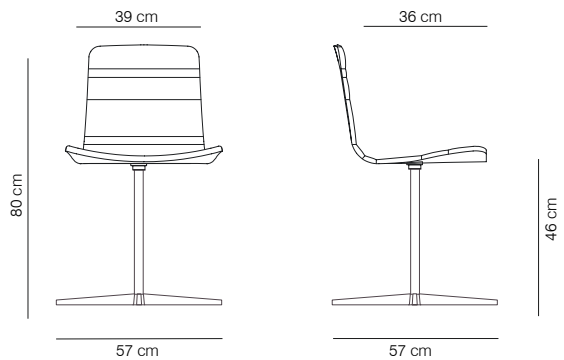

KLBRB - CASTERS BASE / STITCHING WITH LINES UPHOLSTERY

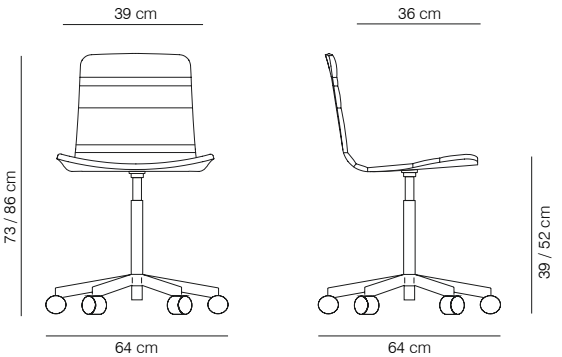

KLTCOB - SWIVEL COUNTER STOOL / STITCHING WITH LINES UPHOLSTERY

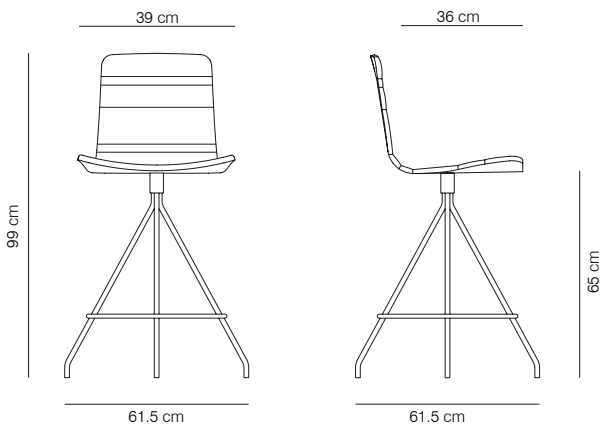

KLTBARB - SWIVEL BAR STOOL / STITCHING WITH LINES UPHOLSTERY

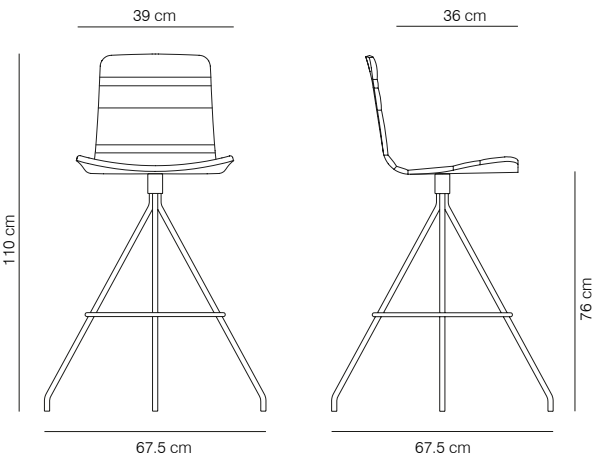

Klip

BY VICTOR CARRASCO

CODE	MODEL	PACKAGING	WEIGHT (kg)	FINISHES		PUBLIC PRICE (Fire Re. Foam	PUBLIC PRICE
				STRUCTURE	UPHOLSTERY		
KL4PB-1	FOUR LEGS BASE / STITCHING WITH LINES UPHOLSTERY	67x55X102 (0.38) 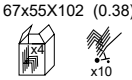 Minimun order is 4 units	10.2 /unit (26)	white, black, sand, altea blue or orange fluorescent	COM / COL	309 €	300 €
KL4PB-2					G2	309 €	300 €
KL4PB-3					G3	352 €	342 €
KL4PB-4					G4	408 €	396 €
KL4PB-5					G5	479 €	465 €
KLGB-1	FOUR LEGS BASE / STITCHING WITH LINES UPHOLSTERY	67x55X88 (0.33)	13.6	white, black, sand, altea blue or orange fluorescent	COM / COL	437 €	424 €
KLGB-2					G2	437 €	424 €
KLGB-3					G3	499 €	484 €
KLGB-4					G4	578 €	561 €
KLGB-5					G5	653 €	634 €
KL4PUB-1	FOUR STAR SWIVEL BASE / STITCHING WITH LINES UPHOLSTERY	67x55X88 (0.33)	9.1	white, black, sand, altea blue or orange fluorescent	COM / COL	437 €	424 €
KL4PUB-2					G2	437 €	424 €
KL4PUB-3					G3	499 €	484 €
KL4PUB-4					G4	578 €	561 €
KL4PUB-5					G5	653 €	634 €
KLBRB-1	CASTERS BASE / STITCHING WITH LINES UPHOLSTERY	66X65X77 (0.33)	12.5	white or black	COM / COL	465 €	452 €
KLBRB-2					G2	465 €	452 €
KLBRB-3					G3	517 €	502 €
KLBRB-4					G4	585 €	568 €
KLBRB-5					G5	669 €	649 €
KLTCOB-1	SWIVEL COUNTER STOOL / STITCHING WITH LINES UPHOLSTERY	55X67X114 (0.42)	17.2	white, black, sand, altea blue or orange fluorescent	COM / COL	591 €	574 €
KLTCOB-2					G2	591 €	574 €
KLTCOB-3					G3	652 €	633 €
KLTCOB-4					G4	728 €	707 €
KLTCOB-5					G5	826 €	802 €
KLTBARB-1	SWIVEL BAR STOOL / STITCHING WITH LINES UPHOLSTERY	55X67X114 (0.42)	17.8	white, black, sand, altea blue or orange fluorescent	COM / COL	591 €	574 €
KLTBARB-2					G2	591 €	574 €
KLTBARB-3					G3	652 €	633 €
KLTBARB-4					G4	728 €	707 €
KLTBARB-5					G5	826 €	802 €

OPTIONS FOR FINISHES:

STRUCTURE: white, black, sand, altea blue or orange fluorescent (except casters base)

Klip

BY VICTOR CARRASCO

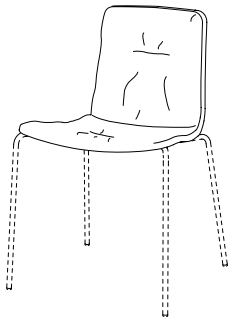

SOFT UPHOLSTERY

Plywood natural beech chair covered by expanded polyurethane foam, soft upholstery.

We use FSC certified wood.

No more than 4 units of the four leg base should be stacked up. x4

The swivel base chair, the four star base chair, the casters base chair and the swivel stools are not stackable.

Don't stack for long time as upholstery can be marked and damage. We recommend the use of stacking protector if you want to stack upholstered chairs (See page 50).

Calibrated steel arms powder coated in thermoreinforced polyester in black, white, sand, altea blue or fluorescent orange.
Available for all types of bases (See page 50).

Needed fabric for material 1.40 m wide: 1 m

KL4PTS - FOUR LEGS BASE / SOFT UPHOLSTERY

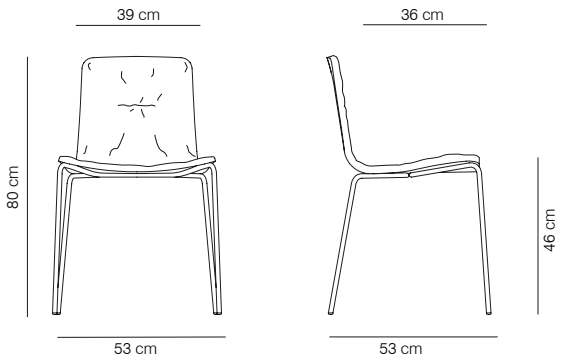

KLGTS - SWIVEL BASE / SOFT UPHOLSTERY

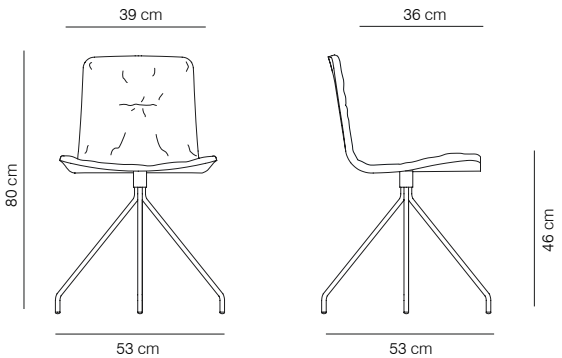

KL4PUTS - FOUR STAR SWIVEL BASE / SOFT UPHOLSTERY

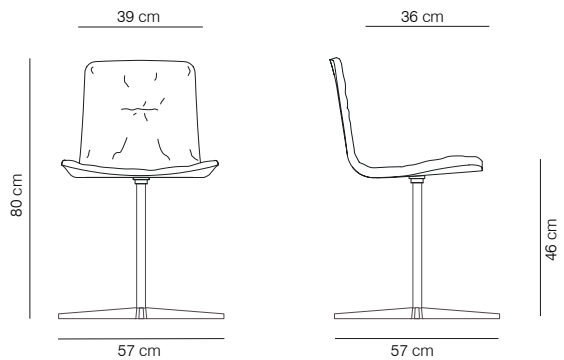

KLBRTS - CASTERS BASE / SOFT UPHOLSTERY

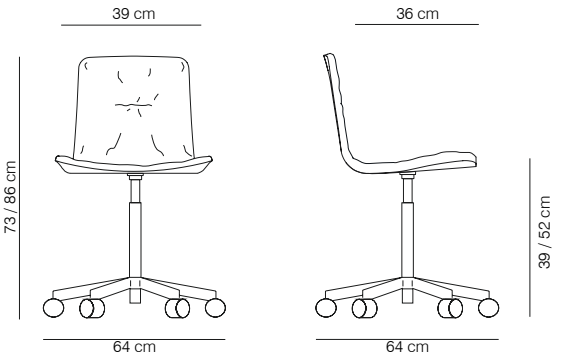

KLTCOTS - SWIVEL COUNTER STOOL / SOFT UPHOLSTERY

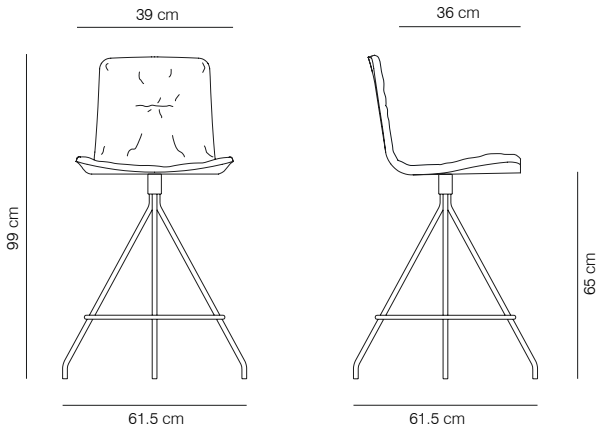

KLTBARTS - SWIVEL BAR STOOL / SOFT UPHOLSTERY

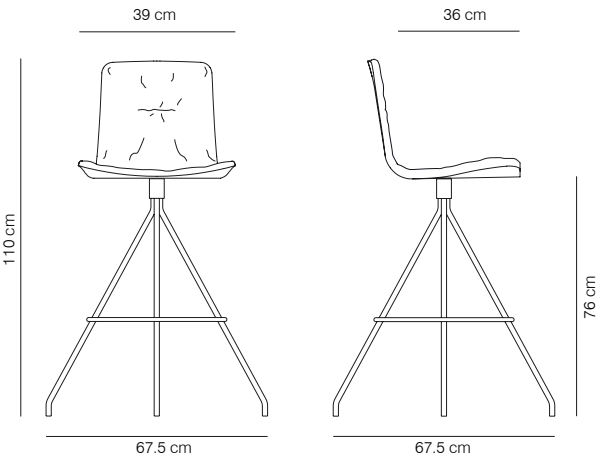

Klip

BY VICTOR CARRASCO

CODE	MODEL	PACKAGING	WEIGHT (kg)	FINISHES		PUBLIC PRICE (Fire Re. Foam	PUBLIC PRICE
				STRUCTURE	UPHOLSTERY		
KL4PTS-1	FOUR LEGS BASE / SOFT UPHOLSTERY	67x55X102 (0.38) 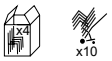 Minimun order is 4 units	10.2 /unit (26)	white, black, sand, altea blue or orange fluorescent	COM / COL	309 €	300 €
KL4PTS-2					G2	309 €	300 €
KL4PTS-3					G3	352 €	342 €
KL4PTS-4					G4	408 €	396 €
KL4PTS-5					G5	479 €	465 €
KLGTS-1	SWIVEL BASE / SOFT UPHOLSTERY	67x55X88 (0.33)	13.6	white, black, sand, altea blue or orange fluorescent	COM / COL	437 €	424 €
KLGTS-2					G2	437 €	424 €
KLGTS-3					G3	499 €	484 €
KLGTS-4					G4	578 €	561 €
KLGTS-5					G5	653 €	634 €
KL4PUTS-1	FOUR STAR SWIVEL BASE / SOFT UPHOLSTERY	67x55X88 (0.33)	9.1	white, black, sand, altea blue or orange fluorescent	COM / COL	437 €	424 €
KL4PUTS-2					G2	437 €	424 €
KL4PUTS-3					G3	499 €	484 €
KL4PUTS-4					G4	578 €	561 €
KL4PUTS-5					G5	653 €	634 €
KLBRTS-1	CASTERS BASE / SOFT UPHOLSTERY	66X65X77 (0.33)	12.5	white or black	COM / COL	465 €	452 €
KLBRTS-2					G2	465 €	452 €
KLBRTS-3					G3	517 €	502 €
KLBRTS-4					G4	585 €	568 €
KLBRTS-5					G5	669 €	649 €
KLTCOTS-1	SWIVEL COUNTER STOOL / SOFT UPHOLSTERY	55X67X114 (0.42)	17.2	white, black, sand, altea blue or orange fluorescent	COM / COL	591 €	574 €
KLTCOTS-2					G2	591 €	574 €
KLTCOTS-3					G3	652 €	633 €
KLTCOTS-4					G4	728 €	707 €
KLTCOTS-5					G5	826 €	802 €
KLTBARTS-1	SWIVEL BAR STOOL / SOFT UPHOLSTERY	55X67X114 (0.42)	17.8	white, black, sand, altea blue or orange fluorescent	COM / COL	591 €	574 €
KLTBARTS-2					G2	591 €	574 €
KLTBARTS-3					G3	652 €	633 €
KLTBARTS-4					G4	728 €	707 €
KLTBARTS-5					G5	826 €	802 €

OPTIONS FOR FINISHES:

STRUCTURE: white, black, sand, altea blue or orange fluorescent (except casters base)

Klip

BY VICTOR CARRASCO

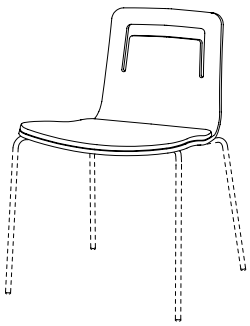

STAINED / LACQUERED WITH CUSHION AND HANDLE

Curved oak plywood stained or curved beech plywood lacquered in the finishes in our collection, with upholstered cushion and the handle in the back.

We use FSC certified wood.

No more than 4 units of the four leg base should be stacked up.
The swivel base chair, the four star base chair, the casters base chair and the swivel stools are not stackable.
Don't stack for long time as upholstery can be marked and damage. We recommend the use of stacking protector if you want to stack upholstered chairs (See page 50).

Calibrated steel arms powder coated in thermoreinforced polyester in black, white, sand, altea blue or fluorescent orange.
Available for all types of bases (See page 50).

Needed fabric for material 1.40 m wide: 0.75 m

Maximum weight supported by the handle: 15 kg.

KL4P_CR - FOUR LEGS BASE / WITH CUSHION AND HANDLE

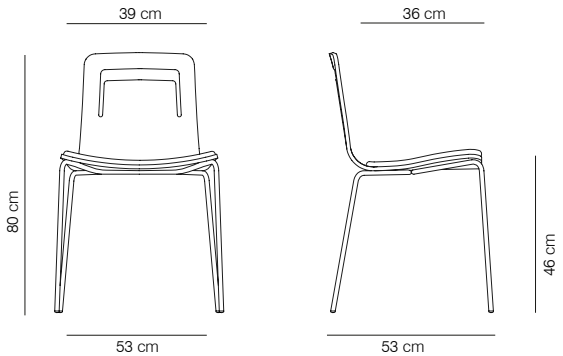

KLG_CR - SWIVEL BASE / WITH CUSHION AND HANDLE

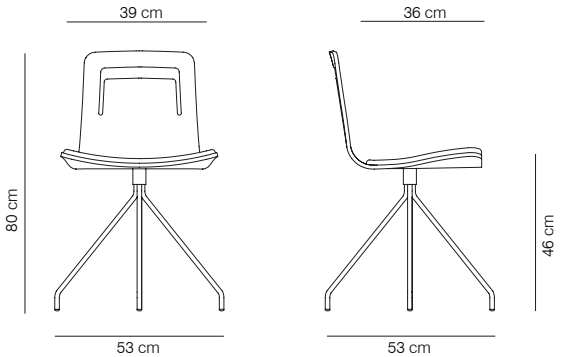

KL4PU_CR - FOUR STAR SWIVEL BASE / WITH CUSHION AND HANDLE

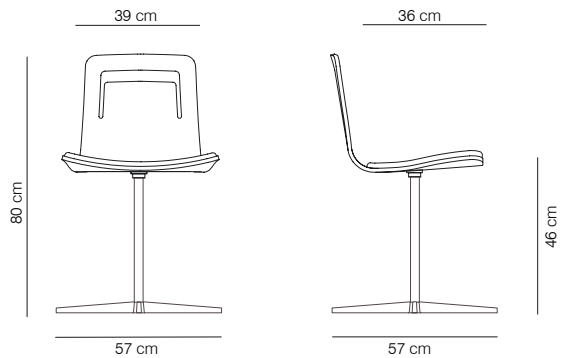

KLBR_CR - CASTERS BASE / WITH CUSHION AND HANDLE

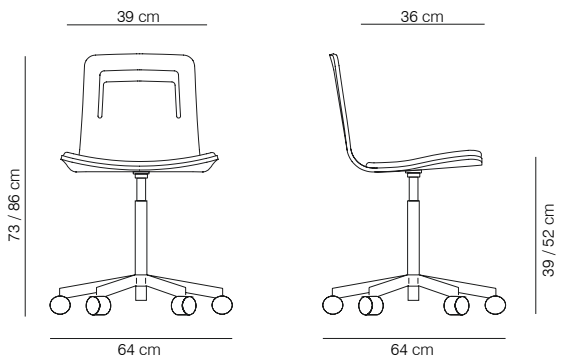

KLTCO_CR - SWIVEL COUNTER STOOL / WITH CUSHION AND HANDLE

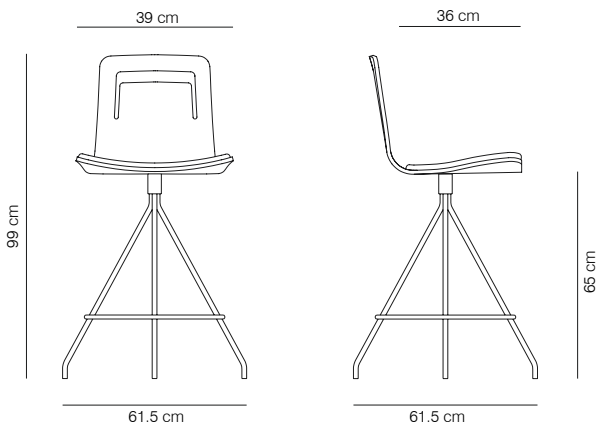

KLTBAR_CR - SWIVEL BAR STOOL / WITH CUSHION AND HANDLE

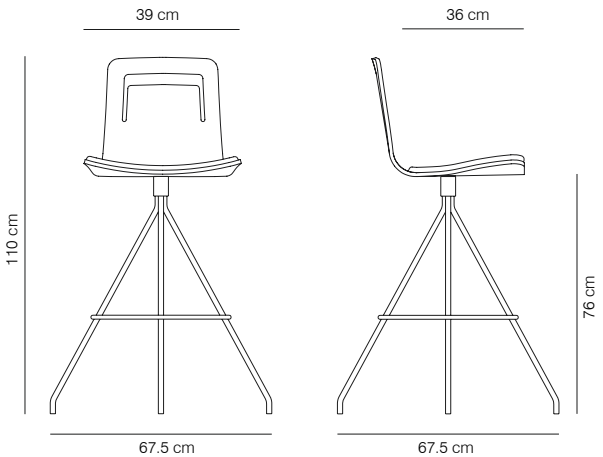

Klip

BY VICTOR CARRASCO

CODE	MODEL	PACKAGING	WEIGHT (kg)	FINISHES			PUBLIC PRICE (Fire Re. Foam	PUBLIC PRICE
				STRUCTURE	SEAT	UPHOLSTERY		
KL4PROCR-1	FOUR LEGS BASE / WITH CUSHION AND HANDLE	67x55X102 (0.38) Minimun order is 4 units	10.2 /unit (26)	white, black, sand, altea blue or orange fluorescent	stained	matt oak, cognac, ash and wenge	COM / COL	333 €	323 €
KL4PROCR-2							G2	333 €	323 €
KL4PROCR-3							G3	377 €	366 €
KL4PROCR-4							G4	434 €	421 €
KL4PROCR-5							G5	506 €	492 €
KL4P1CR-1					lacquered	white, black and grey	COM / COL	357 €	347 €
KL4P1CR-2							G2	357 €	347 €
KL4P1CR-3							G3	402 €	391 €
KL4P1CR-4							G4	460 €	447 €
KL4P1CR-5							G5	534 €	518 €
KL4P2CR-1						sand, tobacco, smoke grey and silver	COM / COL	369 €	359 €
KL4P2CR-2							G2	369 €	359 €
KL4P2CR-3							G3	415 €	403 €
KL4P2CR-4							G4	474 €	460 €
KL4P2CR-5							G5	547 €	531 €
KL4P3CR-1						red, mustard, green, blue and bronze	COM / COL	381 €	370 €
KL4P3CR-2							G2	381 €	370 €
KL4P3CR-3							G3	427 €	415 €
KL4P3CR-4							G4	486 €	472 €
KL4P3CR-5							G5	561 €	545 €
KLGROCR-1	SWIVEL BASE / WITH CUSHION AND HANDLE	67x55X88 (0.33)	13.6	white, black, sand, altea blue or orange fluorescent	stained	matt oak, cognac, ash and wenge	COM / COL	470 €	457 €
KLGROCR-2							G2	470 €	457 €
KLGROCR-3							G3	533 €	518 €
KLGROCR-4							G4	614 €	597 €
KLGROCR-5							G5	715 €	695 €
KLG1CR-1					lacquered	white, black and grey	COM / COL	505 €	490 €
KLG1CR-2							G2	505 €	490 €
KLG1CR-3							G3	569 €	552 €
KLG1CR-4							G4	651 €	632 €
KLG1CR-5							G5	754 €	732 €
KLG2CR-1						sand, tobacco, smoke grey and silver	COM / COL	521 €	506 €
KLG2CR-2							G2	521 €	506 €
KLG2CR-3							G3	586 €	569 €
KLG2CR-4							G4	669 €	649 €
KLG2CR-5							G5	773 €	751 €
KLG3CR-1						red, mustard, green, blue and bronze	COM / COL	538 €	522 €
KLG3CR-2							G2	538 €	522 €
KLG3CR-3							G3	603 €	586 €
KLG3CR-4							G4	687 €	667 €
KLG3CR-5							G5	793 €	770 €

OPTIONS FOR FINISHES:

STRUCTURE: white, black, sand, altea blue or orange fluorescent (except casters base).
SEAT: - STAINED: matt oak, cognac, wenge and ash stain.
- LACQUERED (open pore, microtexturized): black.
- LACQUERED (open pore): COLORS 1: white and grey.
COLORS 2: sand, tobacco, smoke grey and silver.
COLORS 2: red, mustard, green, blue and bronze.

NB: Due to the fact that the wood used is natural, the finish may vary.

Klip

BY VICTOR CARRASCO

CODE	MODEL	PACKAGING	WEIGHT (kg)	FINISHES			PUBLIC PRICE (Fire Re. Foam	PUBLIC PRICE
				STRUCTURE	SEAT	UPHOLSTERY		
KL4PUROCR-1	FOUR STAR SWIVEL BASE / WITH CUSHION AND HANDLE	67x55X88 (0.33)	9.1	white, black, sand, altea blue or orange fluorescent	stained — matt oak, cognac, ash and wenge	COM / COL	470 €	457 €
KL4PUROCR-2						G2	470 €	457 €
KL4PUROCR-3						G3	533 €	518 €
KL4PUROCR-4						G4	614 €	597 €
KL4PUROCR-5						G5	715 €	695 €
KL4PU1CR-1					lacquered — white, black and grey	COM / COL	505 €	490 €
KL4PU1CR-2						G2	505 €	490 €
KL4PU1CR-3						G3	569 €	552 €
KL4PU1CR-4						G4	651 €	632 €
KL4PU1CR-5						G5	754 €	732 €
KL4PU2CR-1					lacquered — sand, tobacco, smoke grey and silver	COM / COL	521 €	506 €
KL4PU2CR-2						G2	521 €	506 €
KL4PU2CR-3						G3	586 €	569 €
KL4PU2CR-4						G4	669 €	649 €
KL4PU2CR-5						G5	773 €	751 €
KL4PU3CR-1					lacquered — red, mustard, green, blue and bronze	COM / COL	538 €	522 €
KL4PU3CR-2						G2	538 €	522 €
KL4PU3CR-3						G3	603 €	586 €
KL4PU3CR-4						G4	687 €	667 €
KL4PU3CR-5						G5	793 €	770 €
KLBRROCR-1	CASTERS BASE / WITH CUSHION AND HANDLE	66X65X77 (0.33)	12.5	white, black	stained — matt oak, cognac, ash and wenge	COM / COL	499 €	484 €
KLBRROCR-2						G2	499 €	484 €
KLBRROCR-3						G3	565 €	549 €
KLBRROCR-4						G4	651 €	632 €
KLBRROCR-5						G5	759 €	736 €
KLBR1CR-1					lacquered — white, black and grey	COM / COL	534 €	519 €
KLBR1CR-2						G2	534 €	519 €
KLBR1CR-3						G3	603 €	586 €
KLBR1CR-4						G4	690 €	670 €
KLBR1CR-5						G5	799 €	776 €
KLBR2CR-1					lacquered — sand, tobacco, smoke grey and silver	COM / COL	553 €	537 €
KLBR2CR-2						G2	553 €	537 €
KLBR2CR-3						G3	622 €	604 €
KLBR2CR-4						G4	709 €	689 €
KLBR2CR-5						G5	820 €	796 €
KLBR3CR-1					lacquered — red, mustard, green, blue and bronze	COM / COL	570 €	554 €
KLBR3CR-2						G2	570 €	554 €
KLBR3CR-3						G3	640 €	622 €
KLBR3CR-4						G4	729 €	708 €
KLBR3CR-5						G5	840 €	815 €

OPTIONS FOR FINISHES:

STRUCTURE: white, black, sand, altea blue or orange fluorescent (except casters base).
SEAT: - STAINED: matt oak, cognac, wenge and ash stain.
- LACQUERED (open pore, microtexturized): black.
- LACQUERED (open pore): COLORS 1: white and grey.
COLORS 2: sand, tobacco, smoke grey and silver.
COLORS 2: red, mustard, green, blue and bronze.

NB: Due to the fact that the wood used is natural, the finish may vary.

Klip

BY VICTOR CARRASCO

CODE	MODEL	PACKAGING	WEIGHT (kg)	FINISHES			PUBLIC PRICE (Fire Re. Foam	PUBLIC PRICE
				STRUCTURE	SEAT	UPHOLSTERY		
KLTCOROCR-1	SWIVEL COUNTER STOOL / WITH CUSHION AND HANDLE	55X67X114 (0.42)	17.2	white, black, sand, altea blue or orange fluorescent	stained	matt oak, cognac, ash and wenge	COM / COL	619 €	601 €
KLTCOROCR-2							G2	619 €	601 €
KLTCOROCR-3							G3	680 €	660 €
KLTCOROCR-4							G4	759 €	737 €
KLTCOROCR-5							G5	858 €	833 €
KLTCO1CR-1					lacquered	white, black and grey	COM / COL	648 €	629 €
KLTCO1CR-2							G2	648 €	629 €
KLTCO1CR-3							G3	711 €	690 €
KLTCO1CR-4							G4	925 €	898 €
KLTCO1CR-5							G5	891 €	866 €
KLTCO2CR-1						sand, tobacco, smoke grey and silver	COM / COL	662 €	643 €
KLTCO2CR-2							G2	662 €	643 €
KLTCO2CR-3							G3	725 €	704 €
KLTCO2CR-4							G4	827 €	803 €
KLTCO2CR-5							G5	906 €	880 €
KLTCO3CR-1						red, mustard, green, blue and bronze	COM / COL	676 €	656 €
KLTCO3CR-2							G2	676 €	656 €
KLTCO3CR-3							G3	739 €	717 €
KLTCO3CR-4							G4	820 €	797 €
KLTCO3CR-5							G5	924 €	897 €
KLTBARROCR-1	SWIVEL BAR STOOL / WITH CUSHION AND HANDLE	55X67X114 (0.42)	17.8	white, black, sand, altea blue or orange fluorescent	stained	matt oak, cognac, ash and wenge	COM / COL	619 €	601 €
KLTBARROCR-2							G2	619 €	601 €
KLTBARROCR-3							G3	680 €	660 €
KLTBARROCR-4							G4	759 €	737 €
KLTBARROCR-5							G5	858 €	833 €
KLTBAR1CR-1					lacquered	white, black and grey	COM / COL	648 €	629 €
KLTBAR1CR-2							G2	648 €	629 €
KLTBAR1CR-3							G3	711 €	690 €
KLTBAR1CR-4							G4	925 €	898 €
KLTBAR1CR-5							G5	891 €	866 €
KLTBAR2CR-1						sand, tobacco, smoke grey and silver	COM / COL	662 €	643 €
KLTBAR2CR-2							G2	662 €	643 €
KLTBAR2CR-3							G3	725 €	704 €
KLTBAR2CR-4							G4	827 €	803 €
KLTBAR2CR-5							G5	906 €	880 €
KLTBAR3CR-1						red, mustard, green, blue and bronze	COM / COL	676 €	656 €
KLTBAR3CR-2							G2	676 €	656 €
KLTBAR3CR-3							G3	739 €	717 €
KLTBAR3CR-4							G4	820 €	797 €
KLTBAR3CR-5							G5	924 €	897 €

OPTIONS FOR FINISHES:

STRUCTURE: white, black, sand, altea blue or orange fluorescent (except casters base).
SEAT: - STAINED: matt oak, cognac, wenge and ash stain.
- LACQUERED (open pore, microtexturized): black.
- LACQUERED (open pore): COLORS 1: white and grey.
COLORS 2: sand, tobacco, smoke grey and silver.
COLORS 2: red, mustard, green, blue and bronze.

NB: Due to the fact that the wood used is natural, the finish may vary.

Klip

BY VICTOR CARRASCO

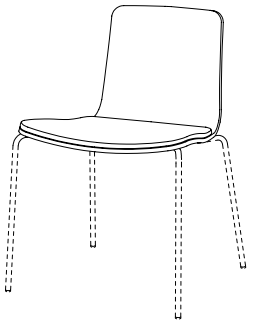

STAINED / LACQUERED WITH CUSHION AND WITHOUT HANDLE

Curved oak plywood stained or curved beech plywood lacquered in the finishes in our collection, with upholstered cushion and without the handle in the back.
We use FSC certified wood.

No more than 4 units of the four leg base should be stacked up. x4
The swivel base chair, the four star base chair, the casters base chair and the swivel stools are not stackable.
Don't stack for long time as upholstered can be marked and damage. We recommend the use of stacking protector if you want to stack upholstered chairs (See page 50).

Calibrated steel arms powder coated in thermoreinforced polyester in black, white, sand, altea blue or fluorescent orange.
Available for all types of bases (See page 50).

Needed fabric for material 1.40 m wide: 0.75 m

KL4P_C - FOUR LEGS BASE / WITH CUSHION AND WITHOUT HANDLE

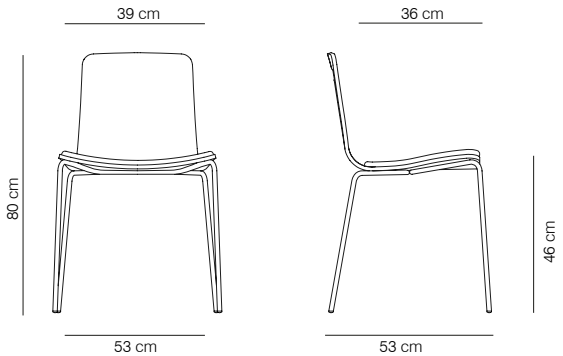

KLG_C - SWIVEL BASE / WITH CUSHION AND WITHOUT HANDLE

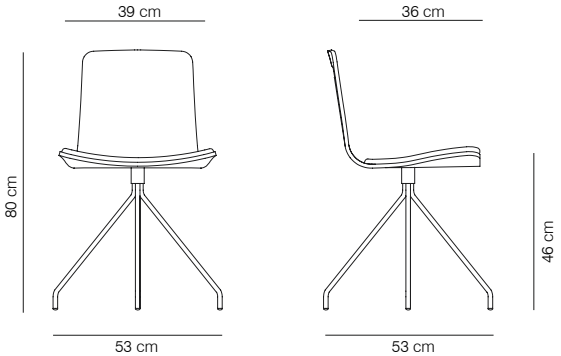

KLBR_C - FOUR STAR SWIVEL BASE / WITH CUSHION AND WITHOUT HANDLE

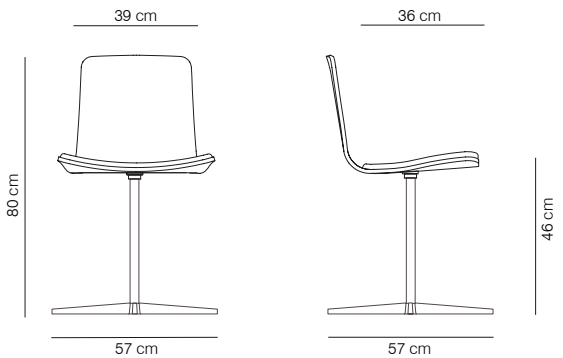

KLBR_C - CASTERS BASE / WITH CUSHION AND WITHOUT HANDLE

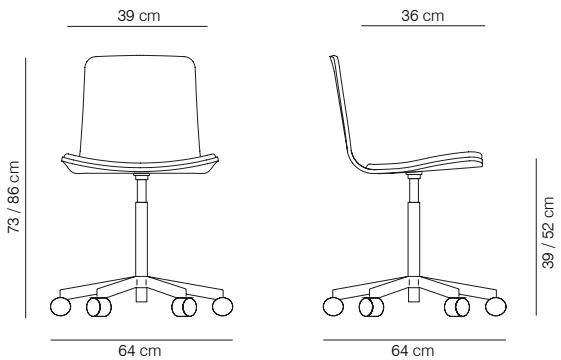

KLTCO_C - SWIVEL COUNTER STOOL / WITH CUSHION AND WITHOUT HANDLE

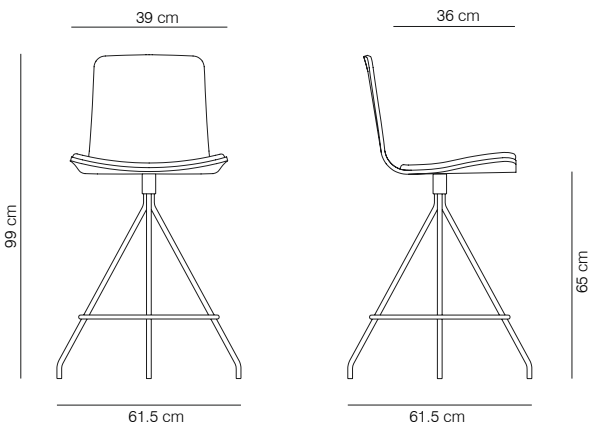

KLTBAR_C - SWIVEL BAR STOOL / WITH CUSHION AND WITHOUT HANDLE

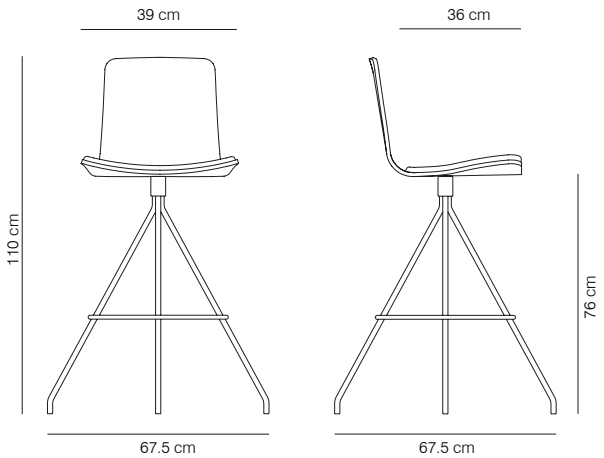

Klip

BY VICTOR CARRASCO

CODE	MODEL	PACKAGING	WEIGHT (kg)	FINISHES			PUBLIC PRICE (Fire Re. Foam	PUBLIC PRICE
				STRUCTURE	SEAT	UPHOLSTERY		
KL4PROC-1	FOUR LEGS BASE / WITH CUSHION AND WITHOUT HANDLE	67x55X102 (0.38) 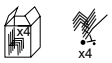 Minimun order is 4 units	10.2 /unit (26)	white, black, sand, altea blue or orange fluorescent	stained	matt oak, cognac, ash and wenge	COM / COL	333 €	323 €
KL4PROC-2							G2	333 €	323 €
KL4PROC-3							G3	377 €	366 €
KL4PROC-4							G4	434 €	421 €
KL4PROC-5							G5	506 €	492 €
KL4P1C-1					lacquered	white, black and grey	COM / COL	357 €	347 €
KL4P1C-2							G2	357 €	347 €
KL4P1C-3							G3	402 €	391 €
KL4P1C-4							G4	460 €	447 €
KL4P1C-5							G5	534 €	518 €
KL4P2C-1						sand, tobacco, smoke grey and silver	COM / COL	369 €	359 €
KL4P2C-2							G2	369 €	359 €
KL4P2C-3							G3	415 €	403 €
KL4P2C-4							G4	474 €	460 €
KL4P2C-5							G5	547 €	531 €
KL4P3C-1						red, mustard, green, blue and bronze	COM / COL	381 €	370 €
KL4P3C-2							G2	381 €	370 €
KL4P3C-3							G3	427 €	415 €
KL4P3C-4							G4	486 €	472 €
KL4P3C-5							G5	561 €	545 €
KLGROC-1	SWIVEL BASE / WITH CUSHION AND WITHOUT HANDLE	67x55X88 (0.33)	13.6	white, black, sand, altea blue or orange fluorescent	stained	matt oak, cognac, ash and wenge	COM / COL	470 €	457 €
KLGROC-2							G2	470 €	457 €
KLGROC-3							G3	533 €	518 €
KLGROC-4							G4	614 €	597 €
KLGROC-5							G5	715 €	695 €
KLG1C-1					lacquered	white, black and grey	COM / COL	505 €	490 €
KLG1C-2							G2	505 €	490 €
KLG1C-3							G3	569 €	552 €
KLG1C-4							G4	651 €	632 €
KLG1C-5							G5	754 €	732 €
KLG2C-1						sand, tobacco, smoke grey and silver	COM / COL	521 €	506 €
KLG2C-2							G2	521 €	506 €
KLG2C-3							G3	586 €	569 €
KLG2C-4							G4	669 €	649 €
KLG2C-5							G5	773 €	751 €
KLG3C-1						red, mustard, green, blue and bronze	COM / COL	538 €	522 €
KLG3C-2							G2	538 €	522 €
KLG3C-3							G3	603 €	586 €
KLG3C-4							G4	687 €	667 €
KLG3C-5							G5	793 €	770 €

OPTIONS FOR FINISHES:

STRUCTURE: white, black, sand, altea blue or orange fluorescent (except casters base).
SEAT: - STAINED: matt oak, cognac, wenge and ash stain.
- LACQUERED (open pore, microtexturized): black.
- LACQUERED (open pore): COLORS 1: white and grey.
COLORS 2: sand, tobacco, smoke grey and silver.
COLORS 2: red, mustard, green, blue and bronze.

NB: Due to the fact that the wood used is natural, the finish may vary.

Klip

BY VICTOR CARRASCO

CODE	MODEL	PACKAGING	WEIGHT (kg)	FINISHES			PUBLIC PRICE (Fire Re. Foam	PUBLIC PRICE
				STRUCTURE	SEAT	UPHOLSTERY		
KL4PUROC-1	FOUR STAR SWIVEL BASE / WITH CUSHION AND WITHOUT HANDLE	67x55X88 (0.33)	9.1	white, black, sand, altea blue or orange fluorescent	stained — matt oak, cognac, ash and wenge	COM / COL	470 €	457 €
KL4PUROC-2						G2	470 €	457 €
KL4PUROC-3						G3	533 €	518 €
KL4PUROC-4						G4	614 €	597 €
KL4PUROC-5						G5	715 €	695 €
KL4PU1C-1					lacquered — white, black and grey	COM / COL	505 €	490 €
KL4PU1C-2						G2	505 €	490 €
KL4PU1C-3						G3	569 €	552 €
KL4PU1C-4						G4	651 €	632 €
KL4PU1C-5						G5	754 €	732 €
KL4PU2C-1					lacquered — sand, tobacco, smoke grey and silver	COM / COL	521 €	506 €
KL4PU2C-2						G2	521 €	506 €
KL4PU2C-3						G3	586 €	569 €
KL4PU2C-4						G4	669 €	649 €
KL4PU2C-5						G5	773 €	751 €
KL4PU3C-1					lacquered — red, mustard, green, blue and bronze	COM / COL	538 €	522 €
KL4PU3C-2						G2	538 €	522 €
KL4PU3C-3						G3	603 €	586 €
KL4PU3C-4						G4	687 €	667 €
KL4PU3C-5						G5	793 €	770 €
KLBRROC-1	CASTERS BASE / WITH CUSHION AND WITHOUT HANDLE	66X65X77 (0.33)	12.5	white, black	stained — matt oak, cognac, ash and wenge	COM / COL	499 €	484 €
KLBRROC-2						G2	499 €	484 €
KLBRROC-3						G3	565 €	549 €
KLBRROC-4						G4	651 €	632 €
KLBRROC-5						G5	759 €	736 €
KLBR1C-1					lacquered — white, black and grey	COM / COL	534 €	519 €
KLBR1C-2						G2	534 €	519 €
KLBR1C-3						G3	603 €	586 €
KLBR1C-4						G4	690 €	670 €
KLBR1C-5						G5	799 €	776 €
KLBR2C-1					lacquered — sand, tobacco, smoke grey and silver	COM / COL	553 €	537 €
KLBR2C-2						G2	553 €	537 €
KLBR2C-3						G3	622 €	604 €
KLBR2C-4						G4	709 €	689 €
KLBR2C-5						G5	820 €	796 €
KLBR3C-1					lacquered — red, mustard, green, blue and bronze	COM / COL	570 €	554 €
KLBR3C-2						G2	570 €	554 €
KLBR3C-3						G3	640 €	622 €
KLBR3C-4						G4	729 €	708 €
KLBR3C-5						G5	840 €	815 €

OPTIONS FOR FINISHES:

STRUCTURE: white, black, sand, altea blue or orange fluorescent (except casters base).
SEAT: - STAINED: matt oak, cognac, wenge and ash stain.
- LACQUERED (open pore, microtexturized): black.
- LACQUERED (open pore): COLORS 1: white and grey.
COLORS 2: sand, tobacco, smoke grey and silver.
COLORS 3: red, mustard, green, blue and bronze.

NB: Due to the fact that the wood used is natural, the finish may vary.

Klip

BY VICTOR CARRASCO

CODE	MODEL	PACKAGING	WEIGHT (kg)	FINISHES			PUBLIC PRICE (Fire Re. Foam	PUBLIC PRICE
				STRUCTURE	SEAT	UPHOLSTERY		
KLTCOROC-1	SWIVEL COUNTER STOOL / WITH CUSHION AND WITHOUT HANDLE	55X67X114 (0.42)	17.2	white, black, sand, altea blue or orange fluorescent	stained / matt oak, cognac, ash and wenge	COM / COL	619 €	601 €
KLTCOROC-2						G2	619 €	601 €
KLTCOROC-3						G3	680 €	660 €
KLTCOROC-4						G4	759 €	737 €
KLTCOROC-5						G5	858 €	833 €
KLTCO1C-1					lacquered / white, black and grey	COM / COL	648 €	629 €
KLTCO1C-2						G2	648 €	629 €
KLTCO1C-3						G3	711 €	690 €
KLTCO1C-4						G4	925 €	898 €
KLTCO1C-5						G5	891 €	866 €
KLTCO2C-1					lacquered / sand, tobacco, smoke grey and silver	COM / COL	662 €	643 €
KLTCO2C-2						G2	662 €	643 €
KLTCO2C-3						G3	725 €	704 €
KLTCO2C-4						G4	827 €	803 €
KLTCO2C-5						G5	906 €	880 €
KLTCO3C-1					lacquered / red, mustard, green, blue and bronze	COM / COL	676 €	656 €
KLTCO3C-2						G2	676 €	656 €
KLTCO3C-3						G3	739 €	717 €
KLTCO3C-4						G4	820 €	797 €
KLTCO3C-5						G5	924 €	897 €
KLTBARROC-1	SWIVEL BAR STOOL / WITH CUSHION AND WITHOUT HANDLE	55X67X114 (0.42)	17.8	white, black, sand, altea blue or orange fluorescent	stained / matt oak, cognac, ash and wenge	COM / COL	619 €	601 €
KLTBARROC-2						G2	619 €	601 €
KLTBARROC-3						G3	680 €	660 €
KLTBARROC-4						G4	759 €	737 €
KLTBARROC-5						G5	858 €	833 €
KLTBAR1C-1					lacquered / white, black and grey	COM / COL	648 €	629 €
KLTBAR1C-2						G2	648 €	629 €
KLTBAR1C-3						G3	711 €	690 €
KLTBAR1C-4						G4	925 €	898 €
KLTBAR1C-5						G5	891 €	866 €
KLTBAR2C-1					lacquered / sand, tobacco, smoke grey and silver	COM / COL	662 €	643 €
KLTBAR2C-2						G2	662 €	643 €
KLTBAR2C-3						G3	725 €	704 €
KLTBAR2C-4						G4	827 €	803 €
KLTBAR2C-5						G5	906 €	880 €
KLTBAR3C-1					lacquered / red, mustard, green, blue and bronze	COM / COL	676 €	656 €
KLTBAR3C-2						G2	676 €	656 €
KLTBAR3C-3						G3	739 €	717 €
KLTBAR3C-4						G4	820 €	797 €
KLTBAR3C-5						G5	924 €	897 €

OPTIONS FOR FINISHES:

STRUCTURE: white, black, sand, altea blue or orange fluorescent (except casters base).
SEAT: - STAINED: matt oak, cognac, wenge and ash stain.
- LACQUERED (open pore, microtexturized): black.
- LACQUERED (open pore): COLORS 1: white and grey.
COLORS 2: sand, tobacco, smoke grey and silver.
COLORS 3: red, mustard, green, blue and bronze.

NB: Due to the fact that the wood used is natural, the finish may vary.

Klip

BY VICTOR CARRASCO

ACCESSORIES

KLBR - ARMS

Calibrated steel arms powder coated in thermoreinforced polyester in black, white, sand, altea blue or fluorescent orange.

Available for all types of bases.

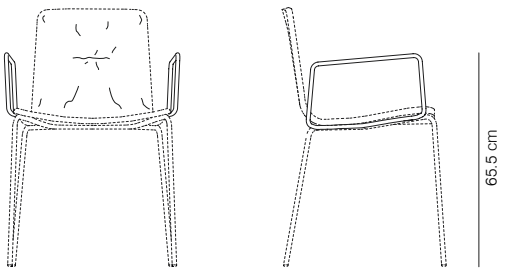

KLCO - STACKING PROTECTION PAD

Polyethylene protective cover to use when stacking upholstered chairs. Stackable up to 4 units.

Don't stack for long time as upholstered can be marked and damage.

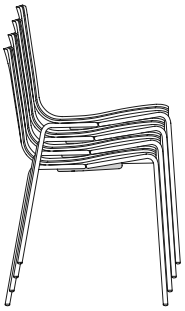

KLUN - LINKING DEVICE FOR CHAIRS

Linking device for chairs with four legs base.
Finish black.

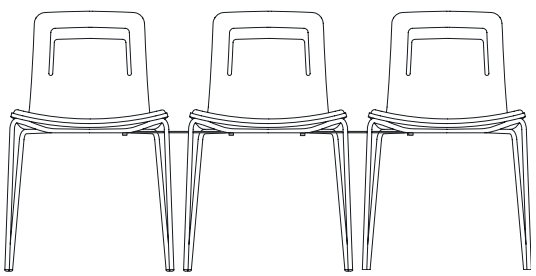

KLCT - TROLLEY

Available to transport chairs with four legs base. Trolley lacquered in black.

The transport is possible for a maximum of 10 chairs simultaneously for models of plywood natural oak stained or lacquered and 4 chairs for upholstered models.

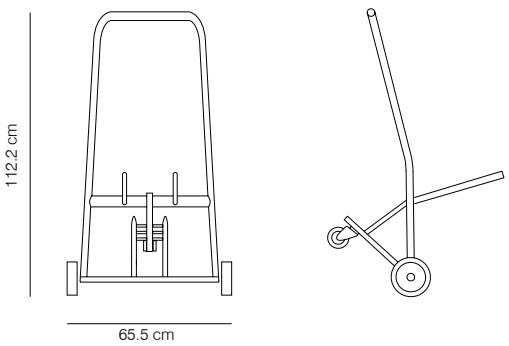

CODE	MODEL	PACKAGING	WEIGHT (kg)	FINISHES	PUBLIC PRICE
KLBR	ARMS	Included and fitted on the chair	1.1	white, black, sand, altea blue or orange fluorescent	75 €
KLCO	STACKING PROTECTION PAD	Included and fitted on the chair 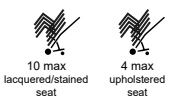	0.4	black	20 €
KLUN	LINKING DEVICE FOR CHAIRS	-	-	black	28 €
KLCT	TROLLEY	69.5x89x89 (0.55)	8.2	black	340 €

Last Minute

BY PATRICIA URQUIOLA

Last Minute

BY PATRICIA URQUIOLA

LMB - LOW STOOL

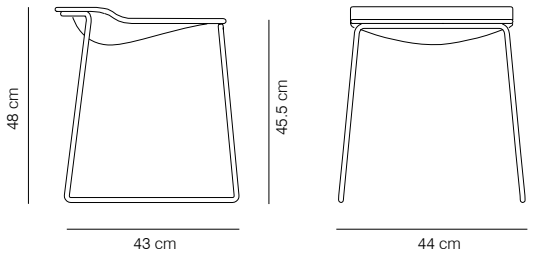

LMM - MEDIUM STOOL

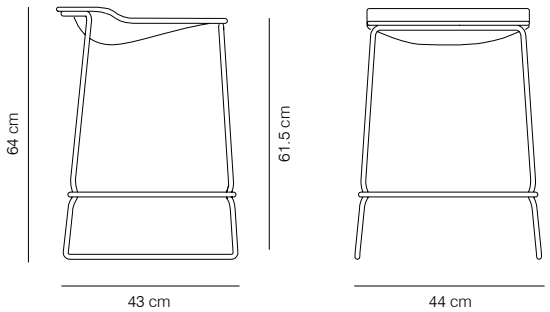

LMA - HIGH STOOL

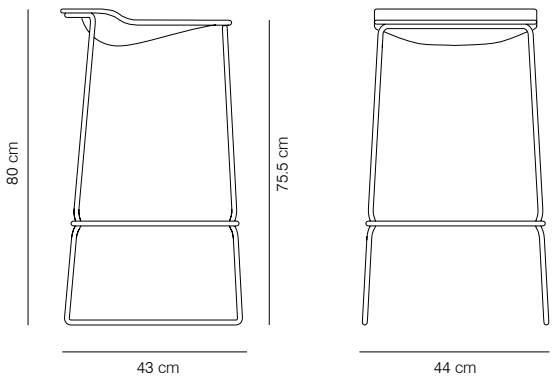

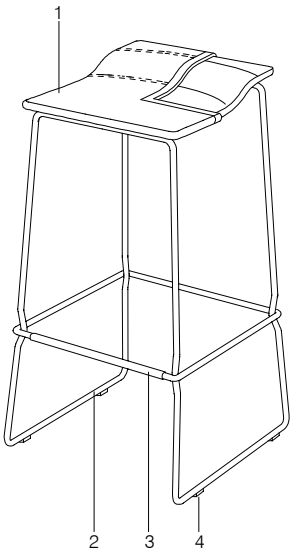

1- Rotomolded polyethylene seat in black, white or sand colour or upholstered in fabric or leather.
2- Structure in calibrated powder coated steel in thermoreinforced polyester in black, white or sand.
3- Footrest in stainless steel.
4- Plastic glides.

Test certificates:
UNE EN 16139:13*
ANSI BIFMA X5.1:2011
* See the list of tests on page 282.

Needed fabric for material 1.40 m wide:
0.75 m

POLYETHYLENE SEAT

Last Minute

BY PATRICIA URQUIOLA

CODE	MODEL	PACKAGING	WEIGHT (kg)	FINISHES	PUBLIC PRICE (Fire Re. Foam	PUBLIC PRICE
LMB-NN	LOW STOOL	46x46x52 (0.11)	6.3	black	-	320 €
LMB-BB				white		
LMB-1				COM / COL	402 €	390 €
LMB-2				G2	402 €	390 €
LMB-3				G3	421 €	408 €
LMB-4				G4	441 €	428 €
LMB-5				G5	460 €	446 €
LMM-NN	MEDIUM STOOL	46x46x66 (0.15)	8.8	black	-	375 €
LMM-BB				white		
LMM-AA				sand	-	427 €
LMM-1				COM / COL	452 €	439 €
LMM-2				G2	452 €	439 €
LMM-3				G3	471 €	458 €
LMM-4				G4	492 €	477 €
LMM-5				G5	511 €	496 €
LMA-NN	HIGH STOOL	46x46x81 (0.18)	9.2	black	-	395 €
LMA-BB				white		
LMA-AA				sand	-	438 €
LMA-1				COM / COL	476 €	462 €
LMA-2				G2	476 €	462 €
LMA-3				G3	502 €	487 €
LMA-4				G4	516 €	501 €
LMA-5				G5	535 €	519 €

OPTIONS FOR FINISHES:

STRUCTURE: black, white or sand.

Season Chair

BY PIERO LISSONI

Season Chair

BY PIERO LISSONI

reddot award 2016
winner

SECHF - SEASON CHAIR FIXED
SECH - SEASON CHAIR WITH CASTERS

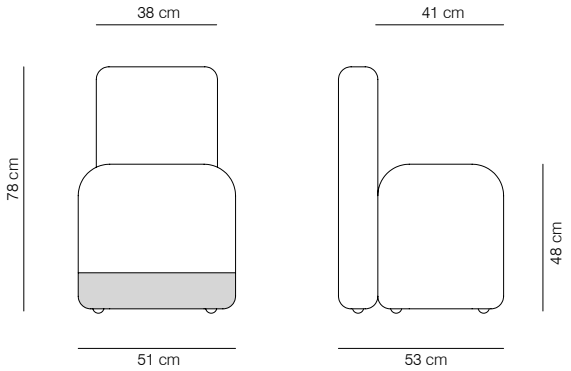

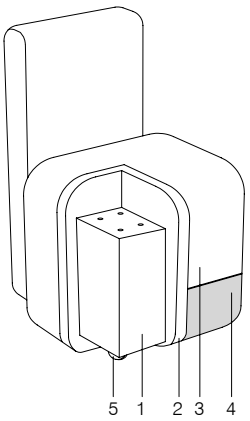

1- Interior structure in solid wood and perfored top of microparticles low in formaldehyde. We use PEFC certified wood.
2- Expanded polyurethane foam in different densities.
3- Fabric or leather.
4- Upholstery protection (technical fabric, grey).
5- Hidden casters or height equalising legs.

Needed fabric for material 1.40 m wide: 2.4 m

Test certificates: ANSI BIFMA X5.1-2011

CODE	MODEL	PACKAGING	WEIGHT (kg)	FINISHES		PUBLIC PRICE (Fire Re. Foam)	PUBLIC PRICE
				UPHOLSTERY	UPHOLSTERY PROTECTION		
SECHF-1	SEASON CHAIR FIXED	67x55X88 (0.33) x1	18.9	COM / COL	technical fabric, grey	619 €	601 €
SECHF-2				G2		619 €	601 €
SECHF-3				G3		779 €	757 €
SECHF-4				G4		982 €	953 €
SECHF-5				G5		1.150 €	1.117 €
SECH-1	SEASON CHAIR WITH CASTERS			COM / COL		642 €	623 €
SECH-2				G2		642 €	623 €
SECH-3				G3		802 €	779 €
SECH-4				G4		1.004 €	975 €
SECH-5				G5		1.173 €	1.139 €

OPTIONS FOR FINISHES:

- UPHOLSTERY PROTECTION: Technical fabric colour grey.

Maarten Chair

BY VICTOR CARRASCO

Maarten Chair

BY VICTOR CARRASCO

SMOOTH UPHOLSTERY

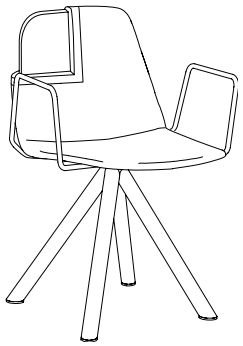

3D curved plywood covered by expanded polyurethane foam with a smooth finish.

Different options for the base:

FOUR LEGS BASE: Calibrated steel structure powder coated in thermoreinforced polyester in white, black, sand, altea blue or fluorescent orange.

Stackable up to 4 units.

SWIVEL BASE: Calibrated steel swivel structure powder coated in thermoreinforced polyester in white, black, sand, altea blue or fluorescent orange.

SWIVEL WOOD BASE: Calibrated steel swivel structure finished with oak veneer stained with the finishes of our collection.

SWIVEL COUNTER STOOL: Calibrated steel swivel structure powder coated in thermoreinforced polyester in white, black, sand, altea blue or fluorescent orange, and footrest in stainless steel.

SWIVEL BAR STOOL: Calibrated steel swivel structure powder coated in thermoreinforced polyester in white, black, sand, altea blue or fluorescent orange, and footrest in stainless steel.

Test certificates: ANSI BIFMA X5.1-2011 (four legs base and swivel base with arms) and UNE EN 16139:13 (swivel base with arms*)

* See the list of tests on page 282.

No more than 4 units of the four leg base should be stacked up. x4
The swivel base chair and the swivel stools are not stackable.
Don't stack for long time as upholstered can be marked and damage.

Needed fabric for material 1.40m wide: 1.1 m

MAAL4P - FOUR LEGS BASE / SMOOTH UPHOLSTERY

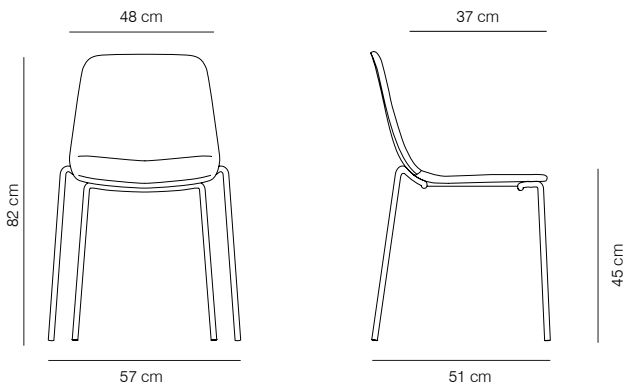

MAAL - SWIVEL BASE / SMOOTH UPHOLSTERY
MAALM - SWIVEL WOODEN BASE / SMOOTH UPHOLSTERY

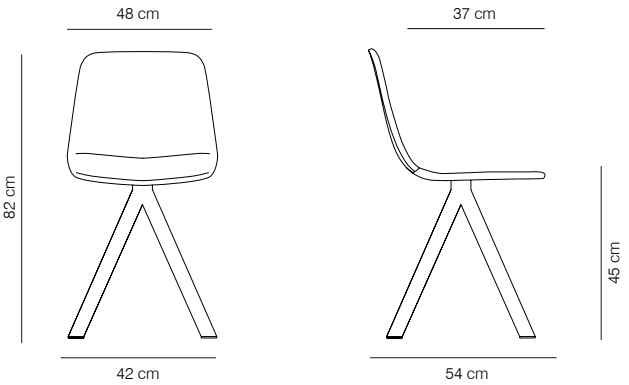

MAALTCO - SWIVEL COUNTER STOOL / SMOOTH UPHOLSTERY

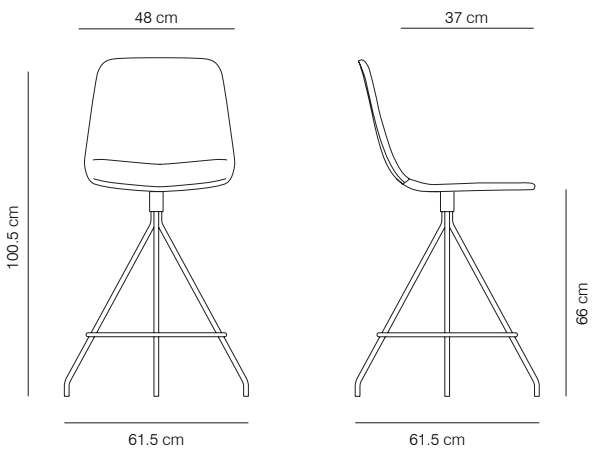

MAALTBAR - SWIVEL BAR STOOL / SMOOTH UPHOLSTERY

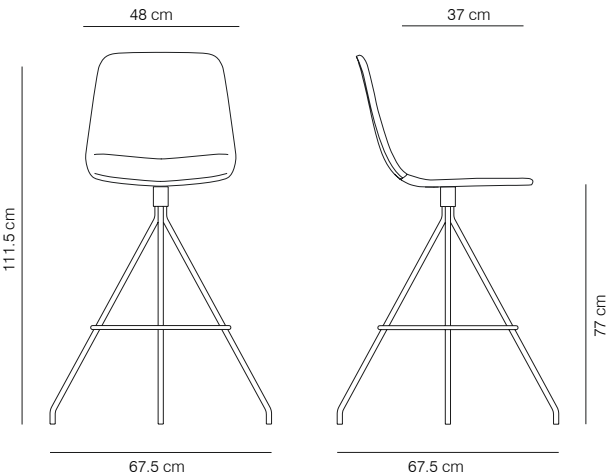

Maarten Chair

BY VICTOR CARRASCO

CODE	MODEL	PACKAGING	WEIGHT (kg)	FINISHES		PUBLIC PRICE (Fire Re. Foam)	PUBLIC PRICE
				STRUCTURE	UPHOLSTERY		
MAAL4P-1	FOUR LEGS BASE / SMOOTH UPHOLSTERY	52x52x84 (0.23)	13.4	white, black	COM / COL	394 €	383 €
MAAL4P-2					G2	394 €	383 €
MAAL4P-3					G3	450 €	437 €
MAAL4P-4					G4	513 €	498 €
MAAL4P-5					G5	586 €	569 €
MAAL4P-1				sand, altea blue or fluorescent orange	COM / COL	491 €	476 €
MAAL4P-2					G2	491 €	476 €
MAAL4P-3					G3	547 €	531 €
MAAL4P-4					G4	617 €	600 €
MAAL4P-5					G5	695 €	674 €
MAAL-1	SWIVEL BASE / SMOOTH UPHOLSTERY	52x52x84 (0.23)	10.4	white, black	COM / COL	506 €	491 €
MAAL-2					G2	506 €	491 €
MAAL-3					G3	577 €	560 €
MAAL-4					G4	659 €	640 €
MAAL-5					G5	751 €	730 €
MAAL-1				sand, altea blue or fluorescent orange	COM / COL	629 €	611 €
MAAL-2					G2	629 €	611 €
MAAL-3					G3	703 €	683 €
MAAL-4					G4	791 €	768 €
MAAL-5					G5	891 €	865 €
MAALM-1	SWIVEL WOODEN BASE / SMOOTH UPHOLSTERY	52x52x84 (0.23)	10.4	matt oak, cognac, ash or wenge	COM / COL	755 €	733 €
MAALM-2					G2	755 €	733 €
MAALM-3					G3	844 €	820 €
MAALM-4					G4	949 €	922 €
MAALM-5					G5	1.069 €	1.038 €
MAALTCO-1	SWIVEL COUNTER STOOL / SMOOTH UPHOLSTERY	55X67X114 (0.42)	17.2	white, black	COM / COL	785 €	762 €
MAALTCO-2					G2	785 €	762 €
MAALTCO-3					G3	878 €	853 €
MAALTCO-4					G4	988 €	959 €
MAALTCO-5					G5	1.024 €	995 €
MAALTCO-1				sand, altea blue or fluorescent orange	COM / COL	976 €	948 €
MAALTCO-2					G2	976 €	948 €
MAALTCO-3					G3	1.070 €	1.039 €
MAALTCO-4					G4	1.189 €	1.154 €
MAALTCO-5					G5	1.214 €	1.179 €
MAALTBAR-1	SWIVEL BAR STOOL / SMOOTH UPHOLSTERY	55X67X114 (0.42)	17.8	white, black	COM / COL	785 €	762 €
MAALTBAR-2					G2	785 €	762 €
MAALTBAR-3					G3	878 €	853 €
MAALTBAR-4					G4	988 €	959 €
MAALTBAR-5					G5	1.024 €	995 €
MAALTBAR-1				sand, altea blue or fluorescent orange	COM / COL	976 €	948 €
MAALTBAR-2					G2	976 €	948 €
MAALTBAR-3					G3	1.070 €	1.039 €
MAALTBAR-4					G4	1.189 €	1.154 €
MAALTBAR-5					G5	1.214 €	1.179 €

NB: Due to the fact that the wood used is natural, the finish may vary.

Maarten Chair

BY VICTOR CARRASCO

SOFT UPHOLSTERY

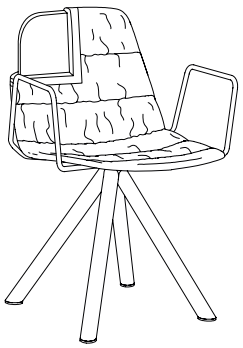

3D curved plywood covered by expanded polyurethane foam with a soft finish.

Different options for the base:

FOUR LEGS BASE: Calibrated steel structure powder coated in thermoreinforced polyester in white, black, sand, altea blue or fluorescent orange.

Stackable up to 4 units.

SWIVEL BASE: Calibrated steel swivel structure powder coated in thermoreinforced polyester in white, black, sand, altea blue or fluorescent orange.

SWIVEL WOOD BASE: Calibrated steel swivel structure finished with oak veneer stained with the finishes of our collection.

SWIVEL COUNTER STOOL: Calibrated steel swivel structure powder coated in thermoreinforced polyester in white, black, sand, altea blue or fluorescent orange, and footrest in stainless steel.

SWIVEL BAR STOOL: Calibrated steel swivel structure powder coated in thermoreinforced polyester in white, black, sand, altea blue or fluorescent orange, and footrest in stainless steel.

Test certificates: ANSI BIFMA X5.1-2011 (four legs base and swivel base with arms) and UNE EN 16139:13 (swivel base with arms*)

* See the list of tests on page 282.

No more than 4 units of the four leg base should be stacked up.
The swivel base chair and the swivel stools are not stackable.
Don't stack for long time as upholstered can be marked and damage.

Needed fabric for material 1.40m wide: 1.1 m

MAA4P - FOUR LEGS BASE / SOFT UPHOLSTERY

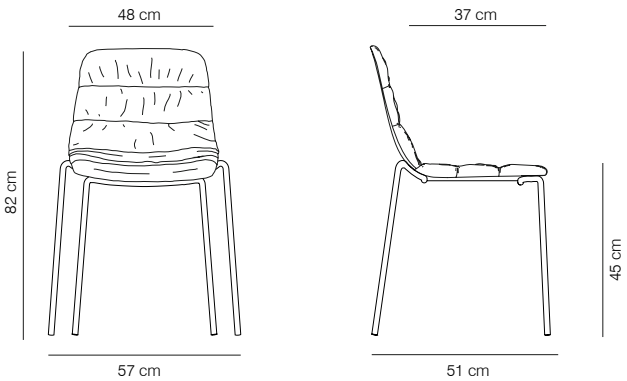

MAA - SWIVEL BASE / SOFT UPHOLSTERY
MAAM - SWIVEL WOODEN BASE / SOFT UPHOLSTERY

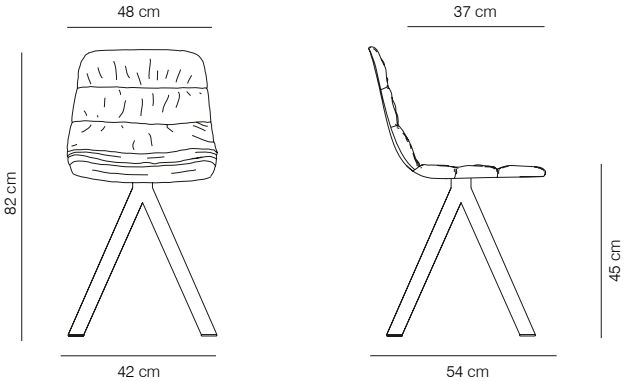

MAATCO - SWIVEL COUNTER STOOL / SOFT UPHOLSTERY

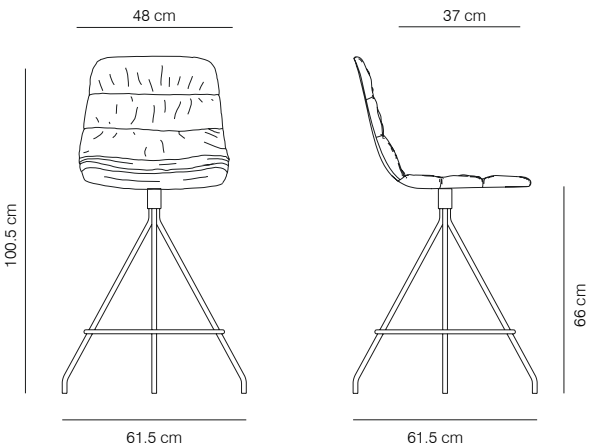

MAATBAR - SWIVEL BAR STOOL / SOFT UPHOLSTERY

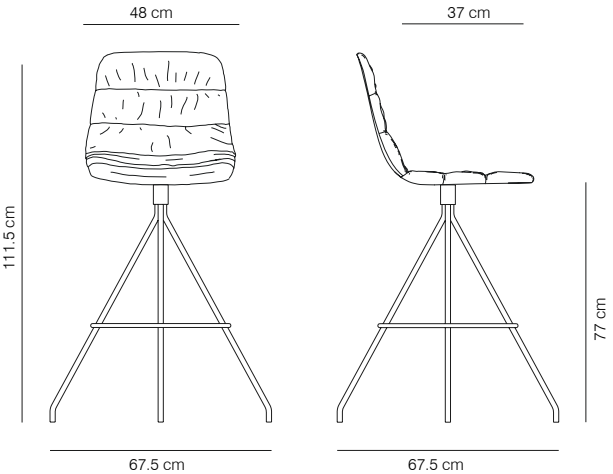

Maarten Chair

BY VICTOR CARRASCO

CODE	MODEL	PACKAGING	WEIGHT (kg)	FINISHES		PUBLIC PRICE (Fire Re. Foam)	PUBLIC PRICE
				STRUCTURE	UPHOLSTERY		
MAA4P-1	FOUR LEGS BASE / SOFT UPHOLSTERY	52x52x84 (0.23)	13.4	white, black	COM / COL	414 €	402 €
MAA4P-2					G2	414 €	402 €
MAA4P-3					G3	472 €	459 €
MAA4P-4					G4	539 €	524 €
MAA4P-5					G5	615 €	597 €
MAA4P-1				sand, altea blue or fluorescent orange	COM / COL	516 €	501 €
MAA4P-2					G2	516 €	501 €
MAA4P-3					G3	577 €	560 €
MAA4P-4					G4	649 €	630 €
MAA4P-5					G5	731 €	710 €
MAA-1	SWIVEL BASE / SOFT UPHOLSTERY	52x52x84 (0.23)	10.4	white, black	COM / COL	531 €	516 €
MAA-2					G2	531 €	516 €
MAA-3					G3	606 €	588 €
MAA-4					G4	691 €	671 €
MAA-5					G5	790 €	767 €
MAA-1				sand, altea blue or fluorescent orange	COM / COL	662 €	643 €
MAA-2					G2	662 €	643 €
MAA-3					G3	740 €	719 €
MAA-4					G4	833 €	809 €
MAA-5					G5	938 €	911 €
MAAM-1	SWIVEL WOODEN BASE / SOFT UPHOLSTERY	52x52x84 (0.23)	10.4	matt oak, cognac, ash or wenge	COM / COL	795 €	772 €
MAAM-2					G2	795 €	772 €
MAAM-3					G3	889 €	863 €
MAAM-4					G4	1.000 €	971 €
MAAM-5					G5	1.126 €	1.093 €
MAATCO-1	SWIVEL COUNTER STOOL / SOFT UPHOLSTERY	55X67X114 (0.42)	17.2	white, black	COM / COL	802 €	779 €
MAATCO-2					G2	802 €	779 €
MAATCO-3					G3	963 €	935 €
MAATCO-4					G4	1.083 €	1.052 €
MAATCO-5					G5	1.198 €	1.164 €
MAATCO-1				sand, altea blue or fluorescent orange	COM / COL	998 €	969 €
MAATCO-2					G2	998 €	969 €
MAATCO-3					G3	1.173 €	1.139 €
MAATCO-4					G4	1.261 €	1.225 €
MAATCO-5					G5	1.302 €	1.264 €
MAATBAR-1	SWIVEL BAR STOOL / SOFT UPHOLSTERY	55X67X114 (0.42)	17.8	white, black	COM / COL	802 €	779 €
MAATBAR-2					G2	802 €	779 €
MAATBAR-3					G3	963 €	935 €
MAATBAR-4					G4	1.083 €	1.052 €
MAATBAR-5					G5	1.198 €	1.164 €
MAATBAR-1				sand, altea blue or fluorescent orange	COM / COL	998 €	969 €
MAATBAR-2					G2	998 €	969 €
MAATBAR-3					G3	1.173 €	1.139 €
MAATBAR-4					G4	1.261 €	1.225 €
MAATBAR-5					G5	1.302 €	1.264 €

NB: Due to the fact that the wood used is natural, the finish may vary.

Maarten Chair

BY VICTOR CARRASCO

CHAIR ACCESSORIES

AUDITORIUM BASE

Base in calibrated powder coated steel in thermoreinforced polyester in grey, with 3D curved plywood covered by expanded polyurethane foam with a soft or smooth finish, suitable for large surfaces.
Needed fabric for material 1.40m wide: 1.1 m.

MAALAU - AUDITORIUM BASE / SMOOTH UPHOLSTERY

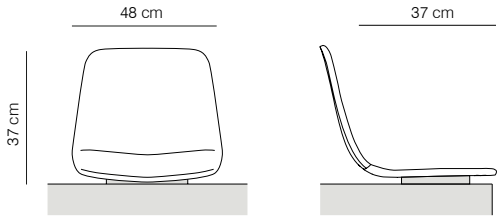

MAAAU - AUDITORIUM BASE / SOFT UPHOLSTERY

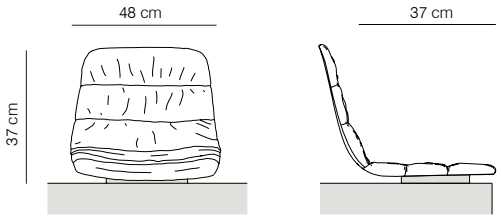

MAB - ARMS

Calibrated steel arms powder coated in thermoreinforced polyester in black, white, sand, altea blue or fluorescent orange.
Arms available for all bases and seats.

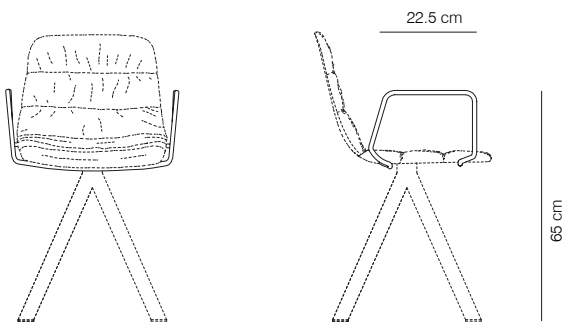

MAABRM - WOODEN ARMS

Calibrated steel arms powder coated in thermoreinforced polyester in black, white, sand, altea blue or flourescent orange, with natural oak armrests stained with the finishes of our collection.
Arms available for all bases and seats.

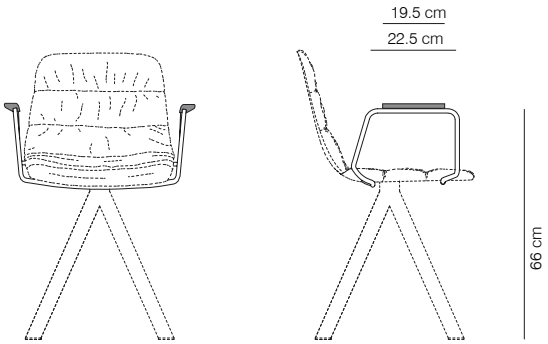

CODE	MODEL	PACKAGING	WEIGHT (kg)	FINISHES		PUBLIC PRICE (Fire Re. Foam)	PUBLIC PRICE
				STRUCTURE	UPHOLSTERY / STAIN		
MAALAU-1	AUDITORIUM BASE / SMOOTH UPHOLSTERY	51x30x42 (0.07)	-	grey	COM / COL	335 €	326 €
MAALAU-2					G2	335 €	326 €
MAALAU-3					G3	382 €	371 €
MAALAU-4					G4	436 €	424 €
MAALAU-5					G5	499 €	484 €
MAAAU-1	AUDITORIUM BASE / SOFT UPHOLSTERY	51x30x42 (0.07)	-	grey	COM / COL	351 €	341 €
MAAAU-2					G2	351 €	341 €
MAAAU-3					G3	401 €	389 €
MAAAU-4					G4	458 €	444 €
MAAAU-5					G5	523 €	508 €
MAB	ARMS	Included and fitted on the chair	1.1	white, black, sand, altea blue or fluorescent orange	-	-	75 €
MAABRM	WOODEN ARMS		1.4		matt oak, cognac, ash or wenge	-	152 €
NB: Due to the fact that the wood used is natural, the finish may vary.							

Maarten Lounge Chair

BY VICTOR CARRASCO

Maarten Lounge Chair

BY VICTOR CARRASCO

SMOOTH UPHOLSTERY

MAALBU - SWIVEL LOUNGE CHAIR / SMOOTH UPHOLSTERY

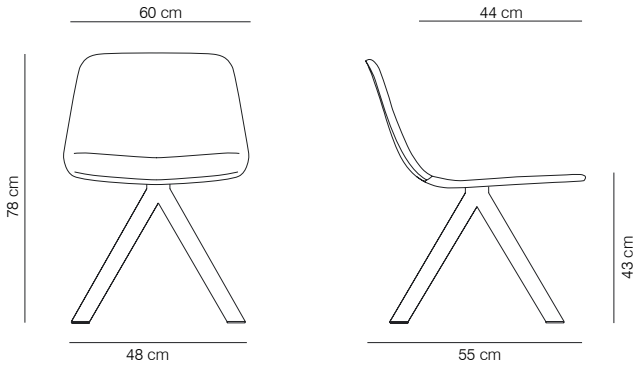

MAALBUM - WOODEN SWIVEL LOUNGE CHAIR / SMOOTH UPHOLSTERY

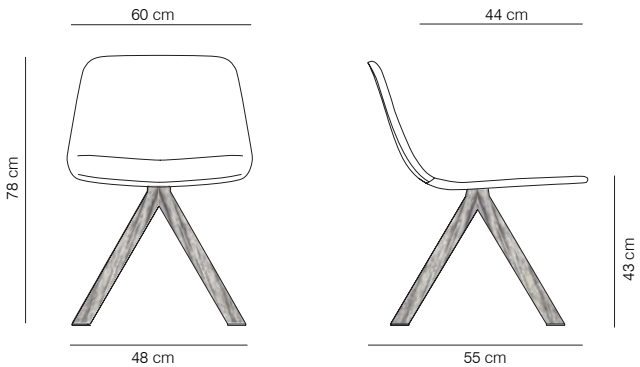

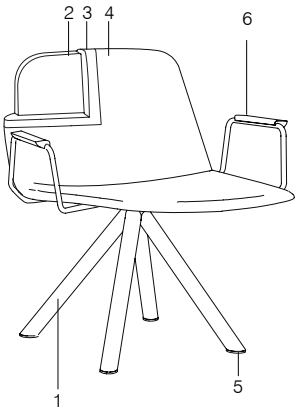

1- Calibrated steel swivel structure powder coated in thermoreinforced polyester in white, black, sand, altea blue or fluorescent orange, or calibrated steel with an oak veneer stained with the finishes of our collection.
2- Moulded shell in 3D surface veneer.
3- Expanded polyurethane foam.
4- Fabric or leather.
5- Transparent injection polypropylene glides.
6- Calibrated steel arms powder coated in thermoreinforced polyester in white, black, sand, altea blue or flourescent orange, with natural oak armrests stained with the finishes of our collection.

Needed fabric for material 1.40m wide: 1.10 m

Test certificates: ANSI BIFMA X5.4-2012

CODE	MODEL	PACKAGING	WEIGHT (kg)	FINISHES		PUBLIC PRICE (Fire Re. Foam)	PUBLIC PRICE
				STRUCTURE	UPHOLSTERY		
MAALBU-1	SWIVEL LOUNGE CHAIR / SMOOTH UPHOLSTERY	75x72x82 (0.44) x1	14.9	white, black	COM / COL	845 €	821 €
MAALBU-2					G2	845 €	821 €
MAALBU-3					G3	915 €	888 €
MAALBU-4					G4	981 €	953 €
MAALBU-5					G5	1.048 €	1.018 €
MAALBU-1				sand, altea blue or fluorescent orange	COM / COL	1.054 €	1.024 €
MAALBU-2					G2	1.054 €	1.024 €
MAALBU-3					G3	1.112 €	1.080 €
MAALBU-4					G4	1.168 €	1.134 €
MAALBU-5					G5	1.242 €	1.206 €
MAALBUM-1	WOODEN SWIVEL LOUNGE CHAIR / SMOOTH UPHOLSTERY	75x72x82 (0.44) x1	14.9	matt oak, cognac, ash or wenge	COM / COL	1.099 €	1.067 €
MAALBUM-2					G2	1.099 €	1.067 €
MAALBUM-3					G3	1.189 €	1.154 €
MAALBUM-4					G4	1.276 €	1.238 €
MAALBUM-5					G5	1.362 €	1.322 €

NB: Due to the fact that the wood used is natural, the finish may vary.

Maarten Lounge Chair

BY VICTOR CARRASCO

SOFT UPHOLSTERY

MAABU - SWIVEL LOUNGE CHAIR / SOFT UPHOLSTERY

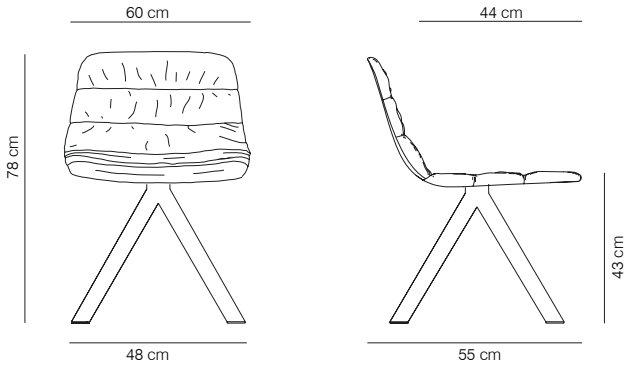

MAABUM - WOODEN SWIVEL LOUNGE CHAIR / SOFT UPHOLSTERY

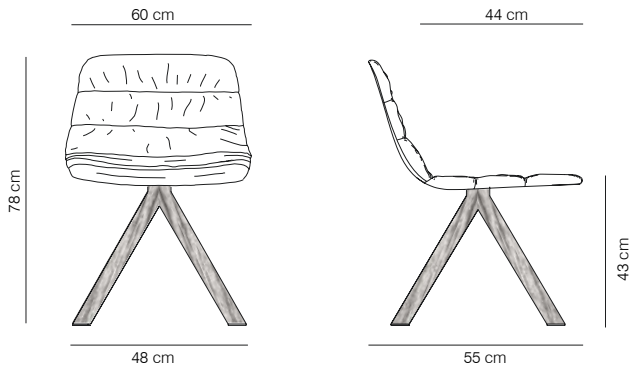

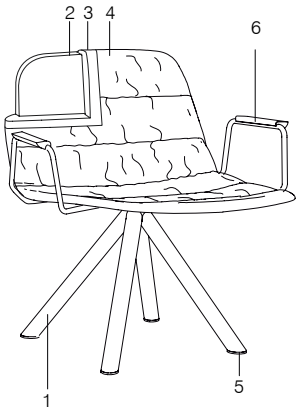

1- Calibrated steel swivel structure powder coated in thermoreinforced polyester in white, black, sand, altea blue or fluorescent orange, or calibrated steel with an oak veneer stained with the finishes of our collection.
2- Moulded shell in 3D surface veneer.
3- Expanded polyurethane foam.
4- Fabric or leather.
5- Transparent injection polypropylene glides.
6- Calibrated steel arms powder coated in thermoreinforced polyester in white, black, sand, altea blue or flourescent orange, with natural oak armrests stained with the finishes of our collection.

Needed fabric for material 1.40m wide: 1.10 m

Test certificates: ANSI BIFMA X5.4-2012

CODE	MODEL	PACKAGING	WEIGHT (kg)	FINISHES		PUBLIC PRICE (Fire Re. Foam)	PUBLIC PRICE
				STRUCTURE	UPHOLSTERY		
MAABU-1	SWIVEL LOUNGE CHAIR / SOFT UPHOLSTERY	75x72x82 (0.44) x1	14.9	white, black	COM / COL	939 €	912 €
MAABU-2					G2	939 €	912 €
MAABU-3					G3	1.016 €	986 €
MAABU-4					G4	1.090 €	1.058 €
MAABU-5					G5	1.164 €	1.130 €
MAABU-1				sand, altea blue or fluorescent orange	COM / COL	1.170 €	1.136 €
MAABU-2					G2	1.170 €	1.136 €
MAABU-3					G3	1.236 €	1.200 €
MAABU-4					G4	1.298 €	1.260 €
MAABU-5					G5	1.381 €	1.340 €
MAABUM-1	WOODEN SWIVEL LOUNGE CHAIR / SOFT UPHOLSTERY	75x72x82 (0.44) x1	14.9	matt oak, cognac, ash or wenge	COM / COL	1.221 €	1.186 €
MAABUM-2					G2	1.221 €	1.186 €
MAABUM-3					G3	1.321 €	1.283 €
MAABUM-4					G4	1.418 €	1.376 €
MAABUM-5					G5	1.514 €	1.470 €

NB: Due to the fact that the wood used is natural, the finish may vary.

Maarten Lounge Chair

BY VICTOR CARRASCO

LOUNGE CHAIR ACCESSORIES

AUDITORIUM BASE

Base in calibrated powder coated steel in thermoreinforced polyester in grey, with 3D curved plywood covered by expanded polyurethane foam with a soft or smooth finish, suitable for large surfaces.

MAALBUAU - AUDITORIUM LOUNGE CHAIR BASE / SMOOTH UPHOLSTERY

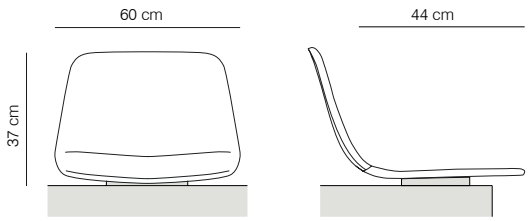

MAABUAU - AUDITORIUM LOUNGE CHAIR BASE / SOFT UPHOLSTERY

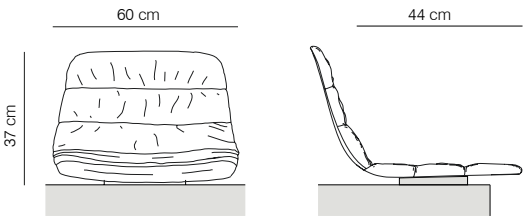

MAABUB - ARMS

Calibrated steel arms powder coated in thermoreinforced polyester in white, black, sand, altea blue or flourescent orange, with natural oak armrests stained with the finishes of our collection.

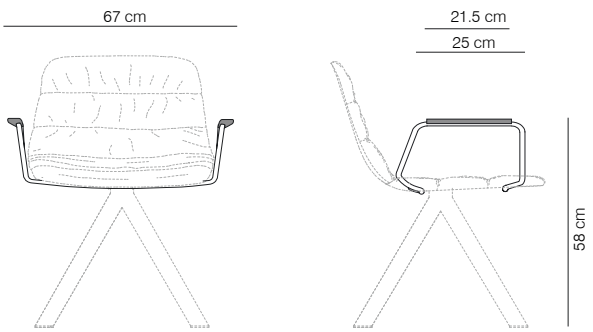

CODE	MODEL	PACKAGING	WEIGHT (kg)	FINISHES		PUBLIC PRICE (Fire Re. Foam)	PUBLIC PRICE
				STRUCTURE	UPHOLSTERY / STAIN		
MAALBUAU-1	AUDITORIUM LOUNGE CHAIR BASE / SMOOTH UPHOLSTERY	-	-	grey	COM / COL	554 €	538 €
MAALBUAU-2					G2	554 €	538 €
MAALBUAU-3					G3	600 €	583 €
MAALBUAU-4					G4	642 €	624 €
MAALBUAU-5					G5	687 €	667 €
MAABUAU-1	AUDITORIUM LOUNGE CHAIR BASE / SOFT UPHOLSTERY	-	-	grey	COM / COL	615 €	597 €
MAABUAU-2					G2	615 €	597 €
MAABUAU-3					G3	666 €	647 €
MAABUAU-4					G4	714 €	693 €
MAABUAU-5					G5	763 €	740 €
MAABUB	ARMS	Included and fitted on the armchair	1.4	black, white, sand, altea blue or fluorescent orange	matt oak, cognac, ash or wenge	-	152 €

NB: Due to the fact that the wood used is natural, the finish may vary.

Nagi

BY TOMOYA TABUCHI

Nagi

BY TOMOYA TABUCHI

SMOOTH UPHOLSTERY

NAGIB - LOW FIXED ARMCHAIR / SMOOTH UPHOLSTERY
NAGIBM - LOW ROCKING ARMCHAIR / SMOOTH UPHOLSTERY

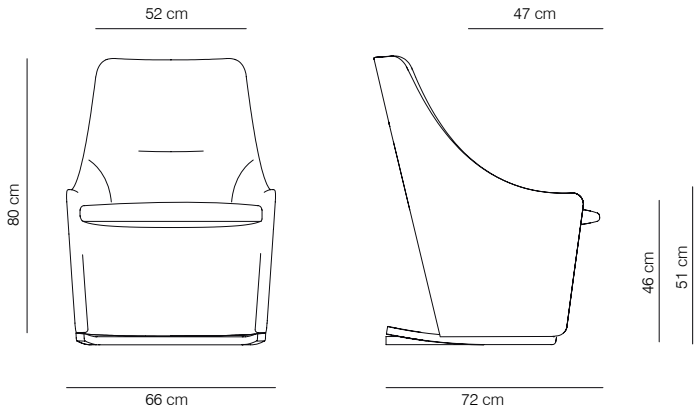

NAGI - HIGH FIXED ARMCHAIR / SMOOTH UPHOLSTERY
NAGIM - HIGH ROCKING ARMCHAIR / SMOOTH UPHOLSTERY

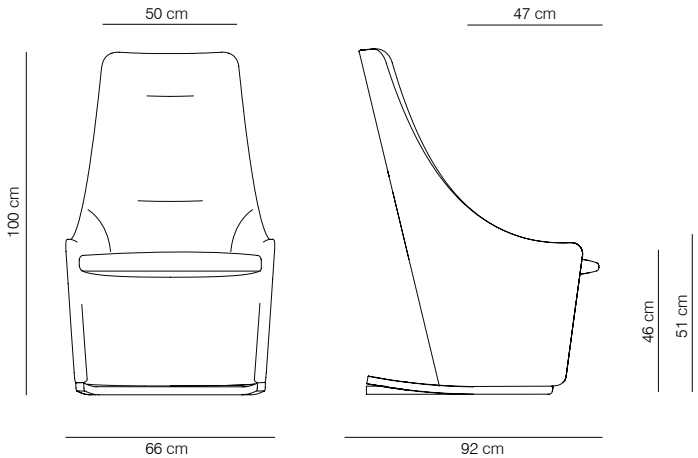

ACCESSORIES

NAGIRE - HEADREST

Accessory that adapts perfectly to the shape of the chair and the height of the user. It makes it possible to enhance comfort for situations that require prolonged sitting. Requires no installation. Available for the high chair in all fabrics of our collection.

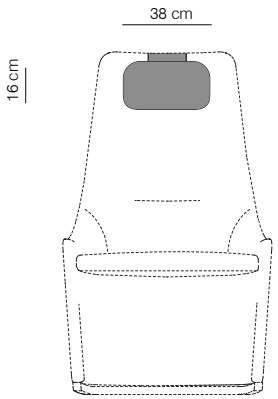

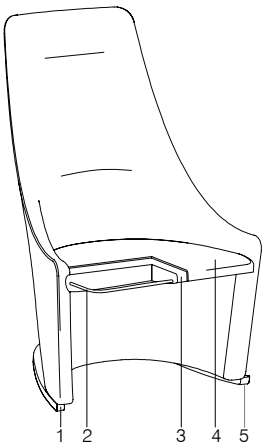

1- Inferior structure (fixed and rocking) in calibrated powder coated steel tube in thermoreinforced polyester, in black, white, altea blue and fluorescent orange.
2- Internal steel tube and sheet structure.
3- Undeformable moulded Fire Retardant polyurethane foam. (Certificates CAL117 and CL 1 IM).
4- Fabric or leather.
5- Nylon glides.

Test certificates:
ANSI BIFMA X5.1-2011 y UNE EN 16139:13*.
*See the list of tests on page 282.

Needed fabric for material 1.40m wide:
NAGIB | NAGIBM: 3.6 m
NAGI | NAGIM: 3.9 m
NAGIRE: 0.7 m

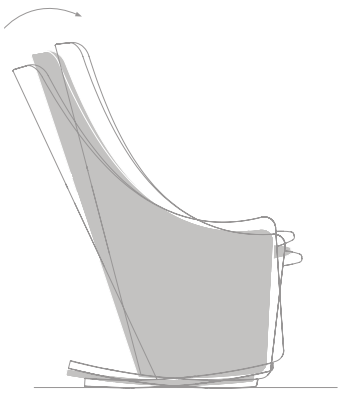

Nagi

BY TOMOYA TABUCHI

CODE		MODEL	PACKAGING	WEIGHT (kg)	FINISHES		PUBLIC PRICE (Fire Re. Foam)
FIXED	ROCKING				STRUCTURE FIXED OR ROCKING	UPHOLSTERY	
NAGIB-1	NAGIBM-1	LOW ARMCHAR / SMOOTH UPHOLSTERY	75x72x82 (0.44)	21.9	black, white, altea blue or fluorescent orange	COM / COL	1.087 €
NAGIB-2	NAGIBM-2					G2	1.087 €
NAGIB-3	NAGIBM-3					G3	1.301 €
NAGIB-4	NAGIBM-4					G4	1.418 €
NAGIB-5	NAGIBM-5					G5	1.604 €
NAGI-1	NAGIM-1	HIGH ARMCHAR / SMOOTH UPHOLSTERY	59x69x133 (0.54) 80x73x12 (0.07)	24.6	black, white, altea blue or fluorescent orange	COM / COL	1.144 €
NAGI-2	NAGIM-2					G2	1.144 €
NAGI-3	NAGIM-3					G3	1.358 €
NAGI-4	NAGIM-4					G4	1.475 €
NAGI-5	NAGIM-5					G5	1.696 €

CODE	MODEL	PACKAGING	WEIGHT (kg)	UPHOLSTERY	PUBLIC PRICE
NAGIRE-1	HEADREST	Included on the armchair	0.8	COM / COL	100 €
NAGIRE-2				G2	100 €
NAGIRE-3				G3	136 €
NAGIRE-4				G4	160 €
NAGIRE-5				G5	186 €

Nagi

BY TOMOYA TABUCHI

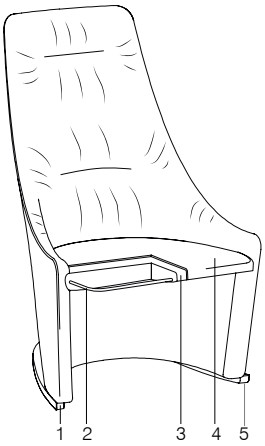

SOFT UPHOLSTERY

NAGIBS - LOW FIXED ARMCHAIR / SOFT UPHOLSTERY
NAGIBSM - LOW ROCKING ARMCHAIR / SOFT UPHOLSTERY

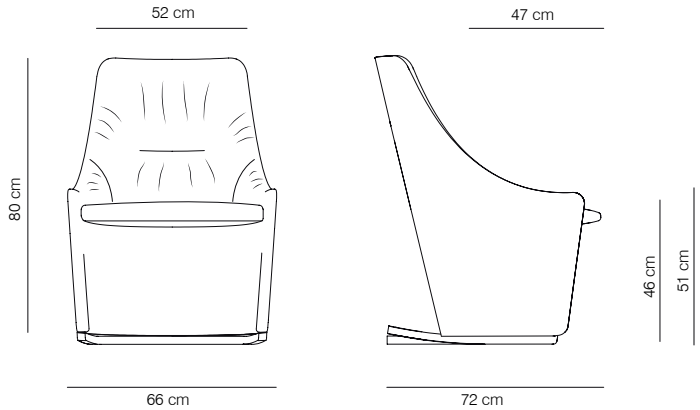

NAGIS - HIGH FIXED ARMCHAIR / SOFT UPHOLSTERY
NAGISM - HIGH ROCKING ARMCHAIR / SOFT UPHOLSTERY

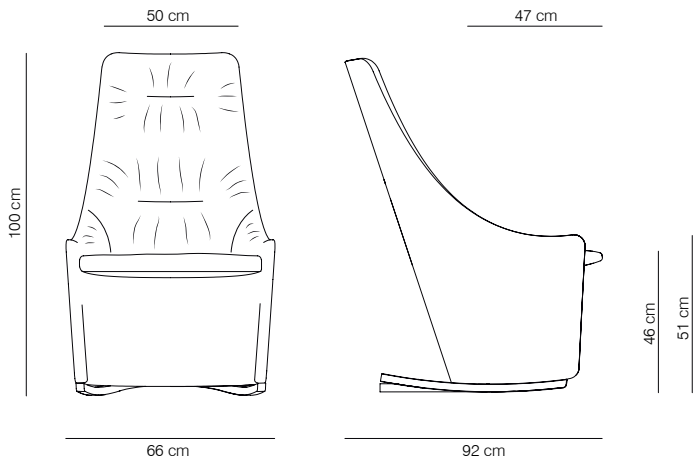

1- Inferior structure (fixed and rocking) in calibrated powder coated steel tube in thermoreinforced polyester, in black, white, altea blue and fluorescent orange.
2- Internal steel tube and sheet structure.
3- Undeformable moulded Fire Retardant polyurethane foam. (Certificates CAL117 and CL 1 IM).
4- Fabric or leather.
5- Nylon glides.

Test certificates:
ANSI BIFMA X5.1-2011 y UNE EN 16139:13*.
*See the list of tests on page 282.

Needed fabric for material 1.40m wide:
NAGIBS | NAGIBSM: 3.6 m
NAGIS | NAGISM: 3.9 m
NAGIRE: 0.7 m

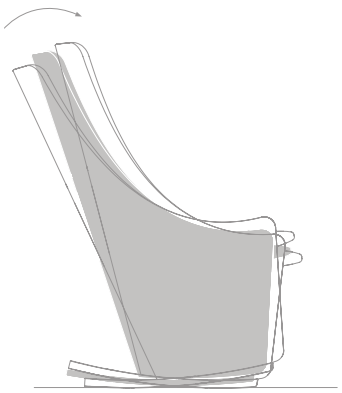

ACCESSORIES

NAGIRE - HEADREST

Accessory that adapts perfectly to the shape of the chair and the height of the user. It makes it possible to enhance comfort for situations that require prolonged sitting. Requires no installation. Available for the high chair in all fabrics of our collection.

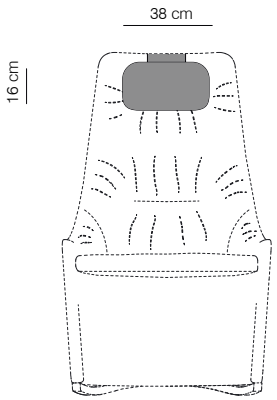

Nagi
BY TOMOYA TABUCHI

CODE		MODEL	PACKAGING	WEIGHT (kg)	FINISHES		PUBLIC PRICE (Fire Re. Foam)
FIXED	ROCKING				STRUCTURE FIXED OR ROCKING	UPHOLSTERY	
NAGIBS-1	NAGIBSM-1	LOW ARMCHAR / SOFT UPHOLSTERY	75x72x82 (0.44)	21.9	black, white, altea blue or fluorescent orange	COM / COL	1.144 €
NAGIBS-2	NAGIBSM-2					G2	1.144 €
NAGIBS-3	NAGIBSM-3					G3	1.358 €
NAGIBS-4	NAGIBSM-4					G4	1.475 €
NAGIBS-5	NAGIBSM-5					G5	1.696 €
NAGIS-1	NAGISM-1	HIGH ARMCHAR / SOFT UPHOLSTERY	59x69x133 (0,54) 80x73x12 (0,07)	24.6	black, white, altea blue or fluorescent orange	COM / COL	1.259 €
NAGIS-2	NAGISM-2					G2	1.259 €
NAGIS-3	NAGISM-3					G3	1.494 €
NAGIS-4	NAGISM-4					G4	1.623 €
NAGIS-5	NAGISM-5					G5	1.866 €

CODE	MODEL	PACKAGING	WEIGHT (kg)	UPHOLSTERY	PUBLIC PRICE
NAGIRE-1	HEADREST	Included on the armchair	0.8	COM / COL	100 €
NAGIRE-2				G2	100 €
NAGIRE-3				G3	136 €
NAGIRE-4				G4	160 €
NAGIRE-5				G5	186 €

Ace

BY JEAN-MARIE MASSAUD

Ace

BY JEAN-MARIE MASSAUD

WOODEN BASE

ACAM - WOODEN BASE ARMCHAIR / SOFT UPHOLSTERY

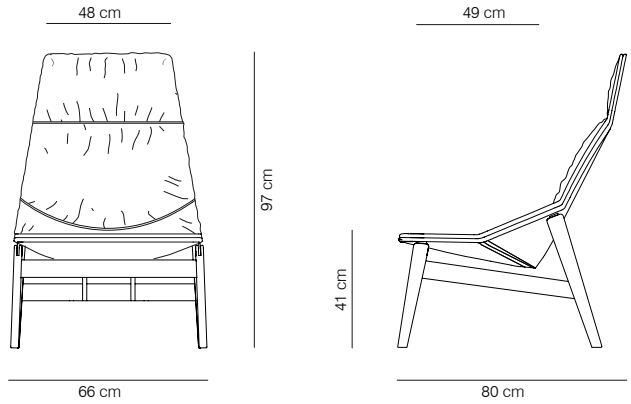

ACAMB - WOODEN BASE ARMCHAIR WITH ARMS / SOFT UPHOLSTERY

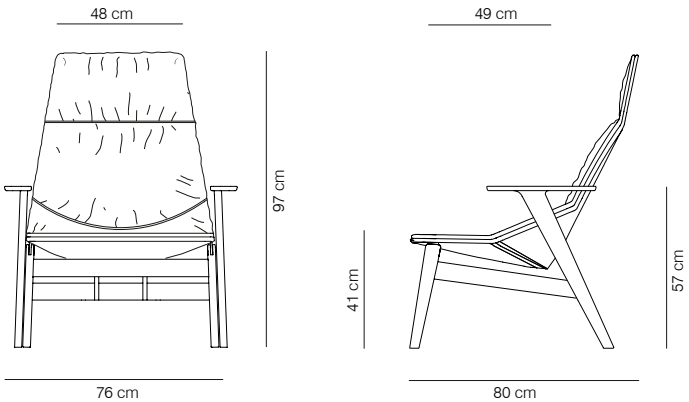

ACCESSORIES

ACARE - HEADREST

Accessory that adapts perfectly to the shape of the chair and the height of the user. It makes it possible to enhance comfort for situations that require prolonged sitting. Requires no installation. Available in all fabrics of our collection.

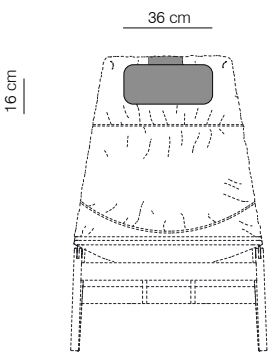

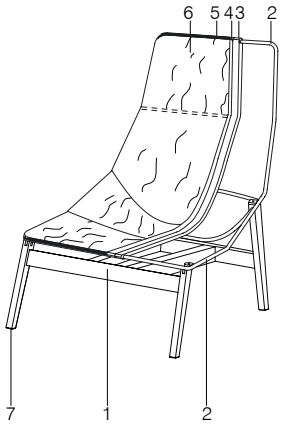

1- Base in solid oak wood stained or lacquered beech with the finishes of our collection.
2- Internal frame of calibrated steel tube powder coated in thermoreinforced polyester.
3- Shape-holding expanded polyurethane foam.
4- Polyester fibre covering and stretch interlining.
5- Zip-around closure.
6- Fabric or leather.
7- Plastic glides with or without felt.

Needed fabric for material 1.40m wide:
ACAM | ACAMB:
1 Colour: total 2.5 m
2 Colours: front 1.05 m
back 1.45 m
ACARE: 0.7 m

Test certificates:
ANSI/BIFMA X5.1:2011

Due to the fact that the wood used is natural, the finish may vary.

Available for the wooden base armchair, felt glides. If not indicated, the armchair will be produced with plastic glides.

This collection offers the possibility of two-colour upholstery, with one colour for the seat and another for the back. In this case, always calculate based on the price of the fabric in the higher category.

Perimeter zipper available in the following colours: blue RAL 6601, green RAL 6029, red RAL 3001, yellow RAL 1016 and black RAL 9005.

Ace

BY JEAN-MARIE MASSAUD

CODE	MODEL	PACKAGING	WEIGHT (kg)	FINISHES			PUBLIC PRICE (Fire Re. Foam)	PUBLIC PRICE
				ZIPPER	BASE	UPHOLSTERY		
ACAM-1	WOOD BASE ARMCHAIR / SOFT UPHOLSTERY	106x78x80 (0.66)	19	yellow, green, red, blue and black	stained (oak)	matt oak, cognac, ash and wenge	COM / COL	1.755 €	1.704 €
ACAM-2							G2	1.755 €	1.704 €
ACAM-3							G3	2.040 €	1.980 €
ACAM-4							G4	2.336 €	2.268 €
ACAM-5							G5	2.601 €	2.525 €
ACAM1TX-1					lacquered (beech)	white, black and grey	COM / COL	1.755 €	1.704 €
ACAM1TX-2							G2	1.755 €	1.704 €
ACAM1TX-3							G3	2.040 €	1.980 €
ACAM1TX-4							G4	2.336 €	2.268 €
ACAM1TX-5							G5	2.601 €	2.525 €
ACAM2TX-1						sand, tobacco, smoke grey and silver	COM / COL	1.842 €	1.788 €
ACAM2TX-2							G2	1.842 €	1.788 €
ACAM2TX-3							G3	2.140 €	2.078 €
ACAM2TX-4							G4	2.453 €	2.382 €
ACAM2TX-5							G5	2.731 €	2.652 €
ACAM3TX-1						red, mustard, green, blue and bronze	COM / COL	1.934 €	1.878 €
ACAM3TX-2							G2	1.934 €	1.878 €
ACAM3TX-3							G3	2.247 €	2.182 €
ACAM3TX-4							G4	2.576 €	2.501 €
ACAM3TX-5							G5	2.868 €	2.784 €
ACAMB-1	WOOD BASE ARMCHAIR WITH ARMS / SOFT UPHOLSTERY	107x79x84 (0.71)	19.4		stained (oak)	matt oak, cognac, ash and wenge	COM / COL	2.018 €	1.960 €
ACAMB-2							G2	2.018 €	1.960 €
ACAMB-3							G3	2.346 €	2.278 €
ACAMB-4							G4	2.688 €	2.609 €
ACAMB-5							G5	2.991 €	2.904 €
ACAMB1TX-1					lacquered (beech)	white, black and grey	COM / COL	2.018 €	1.960 €
ACAMB1TX-2							G2	2.018 €	1.960 €
ACAMB1TX-3							G3	2.346 €	2.278 €
ACAMB1TX-4							G4	2.688 €	2.609 €
ACAMB1TX-5							G5	2.991 €	2.904 €
ACAMB2TX-1						sand, tobacco, smoke grey and silver	COM / COL	2.119 €	2.057 €
ACAMB2TX-2							G2	2.119 €	2.057 €
ACAMB2TX-3							G3	2.464 €	2.392 €
ACAMB2TX-4							G4	2.821 €	2.739 €
ACAMB2TX-5							G5	3.140 €	3.049 €
ACAMB3TX-1						red, mustard, green, blue and bronze	COM / COL	2.224 €	2.160 €
ACAMB3TX-2							G2	2.224 €	2.160 €
ACAMB3TX-3							G3	2.587 €	2.512 €
ACAMB3TX-4							G4	2.961 €	2.875 €
ACAMB3TX-5							G5	3.296 €	3.200 €
ACARE-1	HEADREST	Included on the armchair	0.8	-	-	-	COM / COL	-	100 €
ACARE-2							G2	-	100 €
ACARE-3							G3	-	136 €
ACARE-4							G4	-	160 €
ACARE-5							G5	-	186 €

NB: Due to the fact that the wood used is natural, the finish may vary.

Ace

BY JEAN-MARIE MASSAUD

METAL BASE

ACASOFT - METAL BASE ARMCHAIR / SOFT UPHOLSTERY

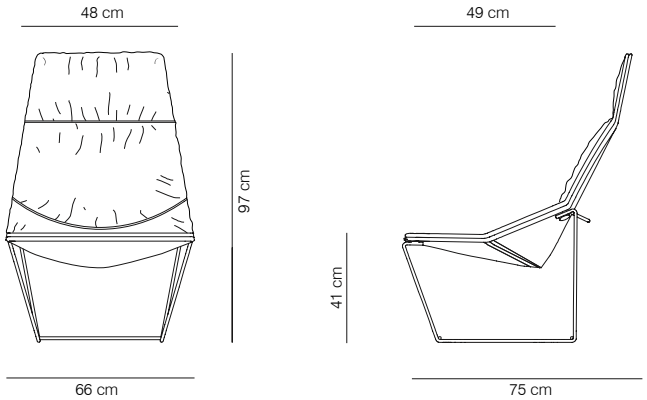

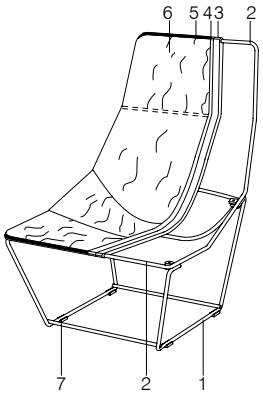

1- Base of calibrated steel tube powder coated in thermoreinforced polyester in white and black.
2- Internal frame of calibrated steel tube powder coated in thermoreinforced polyester.
3- Shape-holding expanded polyurethane foam.
4- Polyester fibre covering and stretch interlining.
5- Zip-around closure.
6- Fabric or leather.
7- Plastic glides.

Needed fabric for material 1.40m wide:
ACASOFT: 1 Colour: total 2.5 m
2 Colours: front 1.05 m
back 1.45 m
ACARE: 0.7 m

Test certificates:
ANSI/BIFMA X5.4:2012 and UNE-EN 16139:2013.

This collection offers the possibility of two-colour upholstery, with one colour for the seat and another for the back. In this case, always calculate based on the price of the fabric in the higher category.

Perimeter zipper available in the following colours: blue RAL 6601, green RAL 6029, red RAL 3001, yellow RAL 1016 and black RAL 9005.

ACCESSORIES

ACARE - HEADREST

Accessory that adapts perfectly to the shape of the chair and the height of the user. It makes it possible to enhance comfort for situations that require prolonged sitting. Requires no installation. Available in all fabrics of our collection.

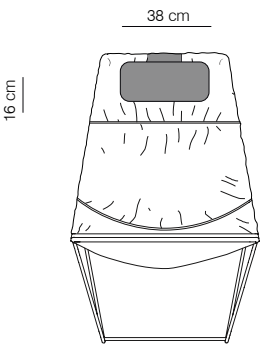

Ace

BY JEAN-MARIE MASSAUD

CODE	MODEL	PACKAGING	WEIGHT (kg)	FINISHES			PUBLIC PRICE (Fire Re. Foam)	PUBLIC PRICE
				ZIPPER	STRUCTURE	UPHOLSTERY		
ACASOFT-1	METAL BASE ARMCHAIR / SOFT UPHOLSTERY	79x69x107 (0.58)	14.8	yellow, green, red, blue and black	white, black	COM / COL	1.162 €	1.128 €
ACASOFT-2						G2	1.162 €	1.128 €
ACASOFT-3						G3	1.365 €	1.325 €
ACASOFT-4						G4	1.578 €	1.532 €
ACASOFT-5						G5	1.773 €	1.722 €
ACARE-1	HEADREST	Included on the armchair	0.8	-	-	COM / COL	-	100 €
ACARE-2						G2	-	100 €
ACARE-3						G3	-	136 €
ACARE-4						G4	-	160 €
ACARE-5						G5	-	186 €

OPTIONS FOR FINISHES:

- ZIPPER: yellow, green, red, blue and black.
- STRUCTURE: white and black.

Brix

BY KENSAKU OSHIRO

Brix

BY KENSAKU OSHIRO

BRIXE - NARROW ARM ARMCHAIR

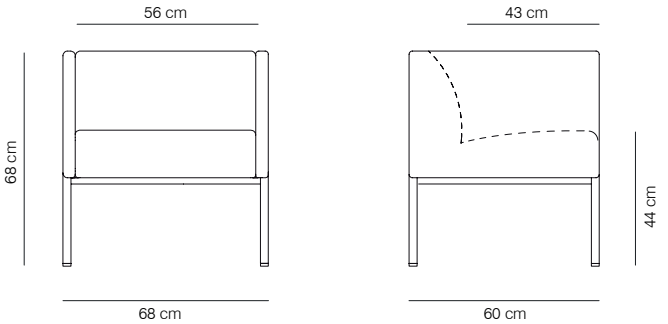

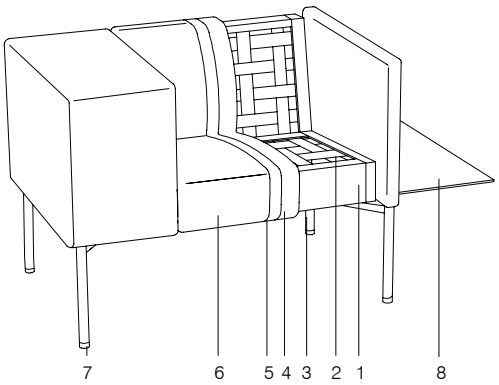

BRIX - WIDE ARM ARMCHAIR

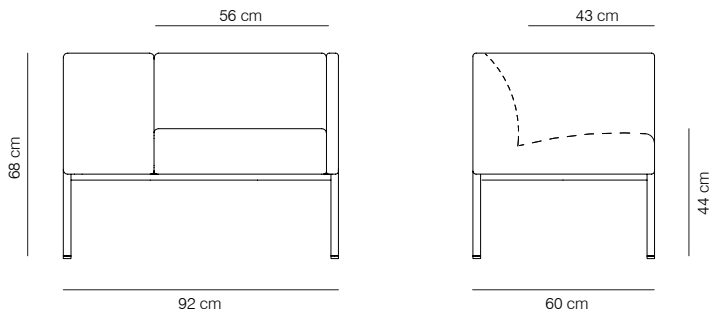

1- Interior structure of arms, back and seat in solid wood.
2- Woven seat and back structure.
We use PEFC certified wood.
3- Structure in calibrated steel tube powder coated in thermoreinforced polyester in white or black.
4- Expanded polyurethane foam in different densities.
5- Polyester fibre covering.
6- Fabric or leather.
7- Transparent injection polypropylene glides.
8- Auxiliary table manufactured in lacquered MDF.

Needed fabric for material 1.40m wide:
BRIXE: 2.3 m
BRIX: 2.6 m

Test certificates:
UNE EN 16139:13 and ANSI-BIFMA X5.4 - 2012

The BRIX armchair can be served with the wide arm to the left or to the right. Indicate the desired option in the order, remembering that the name left / right is understood by looking at the element for manufacturing purposes.

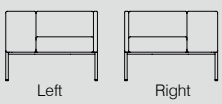

BRIM - TABLE

The auxiliary table is manufactured in lacquered MDF in the colours of our collection and is symmetrical so it can be used on the right or the left alike.
Maximum weight: 20 Kg.

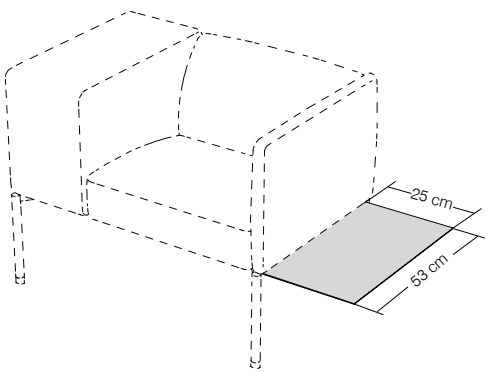

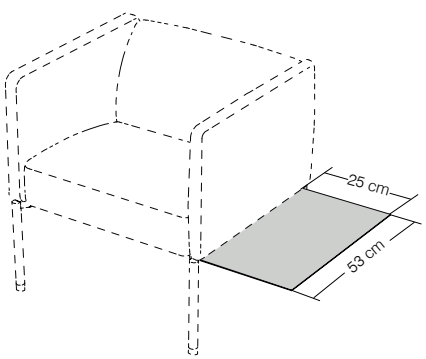

Brix

BY KENSAKU OSHIRO

CODE	MODEL	PACKAGING	WEIGHT (kg)	FINISHES		PUBLIC PRICE (Fire Re. Foam)	PUBLIC PRICE
				STRUCTURE	UPHOLSTERY		
BRIXE-1	NARROW ARM ARMCHAIR	99x64x74 (0.47)	22.6	white, black	COM / COL	1.048 €	1.018 €
BRIXE-2					G2	1.048 €	1.018 €
BRIXE-3					G3	1.211 €	1.175 €
BRIXE-4					G4	1.410 €	1.369 €
BRIXE-5					G5	1.652 €	1.604 €
BRIX-1	WIDE ARM ARMCHAIR	99x64x74 (0.47)	25.7	white, black	COM / COL	1.100 €	1.068 €
BRIX-2					G2	1.100 €	1.068 €
BRIX-3					G3	1.271 €	1.234 €
BRIX-4					G4	1.481 €	1.438 €
BRIX-5					G5	1.734 €	1.684 €

CODE	MODEL	PACKAGING	WEIGHT (kg)	FINISHES	PUBLIC PRICE
BRIM	TABLE	70x7x77 (0.04)	3.5	white, black and grey	158 €
				sand, tobacco, smoke grey and silver	166 €
				red, mustard, green, blue and bronze	174 €

OPTIONS FOR FINISHES:

- TOP: - LACQUERED (microtexturized): black.
  - LACQUERED (smooth and satin):
    COLOR 1: white and grey
    COLORS 2: sand, tobacco, smoke grey and silver
    COLORS 3: red, mustard, green, blue and bronze

Penta

BY TOAN NGUYEN

Penta

BY TOAN NGUYEN

PE - FIXED BASE ARMCHAIR

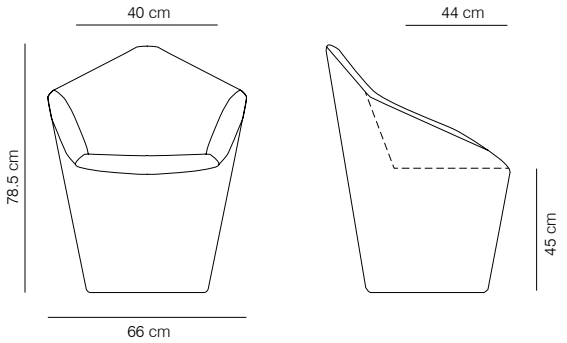

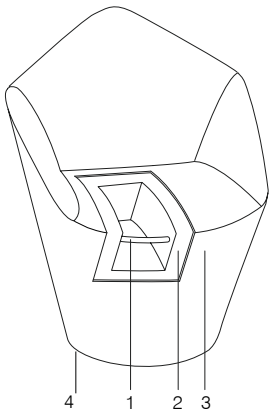

PEG - SWIVEL BASE ARMCHAIR

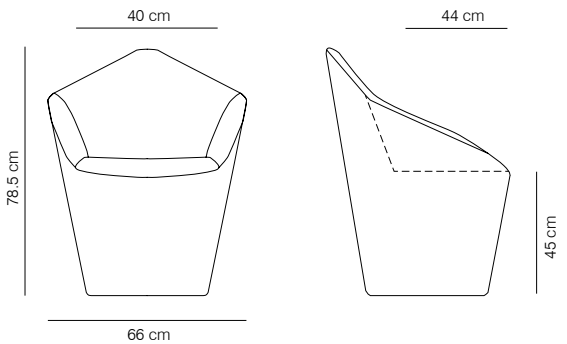

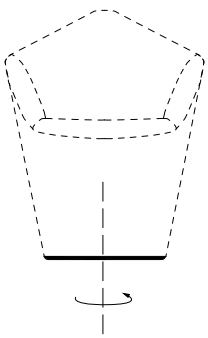

1- Internal steel tube and sheet structure.
2- Undeformable moulded Fire Retardant polyurethane foam. (Certificates CAL117 and CL 1 IM).
3- Fabric or leather.
4- Fixed or swivel base.

Needed fabric for material 1.40m wide:
PE | PEG: 2.30 m

Test certificates:
ANSI-BIFMA X5.4 : 2012

CODE	MODEL	PACKAGING	WEIGHT (kg)	FINISHES	PUBLIC PRICE (Fire Re. Foam)
PE-1	FIXED BASE ARMCHAIR	66x63x83 (0.35) x1	24.4	COM / COL	961 €
PE-2				G2	961 €
PE-3				G3	1.120 €
PE-4				G4	1.406 €
PE-5				G5	1.623 €
PEG-1	SWIVEL BASE ARMCHAIR	66x63x83 (0.35) x1	24	COM / COL	1.167 €
PEG-2				G2	1.167 €
PEG-3				G3	1.334 €
PEG-4				G4	1.631 €
PEG-5				G5	1.860 €

Wrapp

BY MARC KRUSIN

Wrapp

BY MARC KRUSIN

WRN - SLED BASE ARMCHAIR

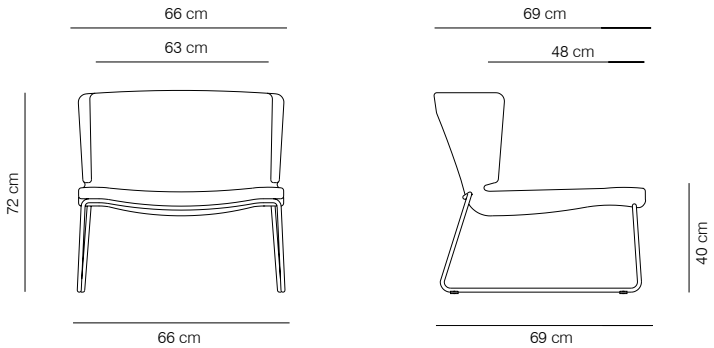

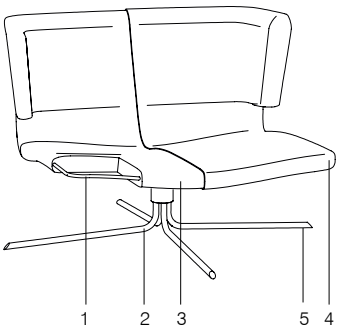

1- Internal steel tube and sheet structure.
2- Swivel and sled calibrated chrome steel base, or four solid oak wood legs stained with the finishes of our collection.
3- Fire Retardant polyurethane foam. (Certificates CAL117 and CL 1 IM).
4- Fabric or leather.
5- Plastic glides.

Needed fabric for material 1.40 m wide: 2.15 m.

Test certificates:
UNE EN 16139:13
ANSI/BIFMA X5.4-2012

WRM - WOODEN BASE ARMCHAIR

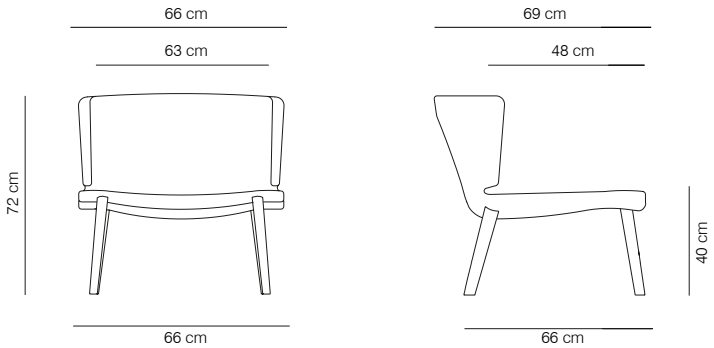

For the wooden base armcharir, the possibility of adding felt glides to the legs exists. If not otherwise indicated, the product will be delivered with plastic glides.

WRG - SWIVEL BASE ARMCHAIR

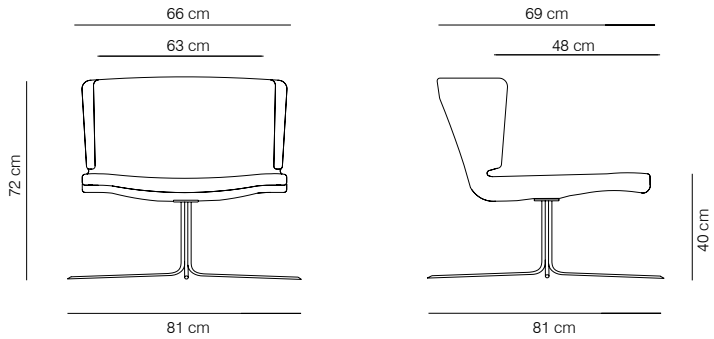

Wrapp
BY MARC KRUSIN

CODE	MODEL	PACKAGING	WEIGHT (kg)	FINISHES		PUBLIC PRICE (Fire Re. Foam)
				STRUCTURE	UPHOLSTERY	
WRN-1	SLED BASE ARMCHAIR	87X71X73 (0.45) x1	13.7	chrome	COM / COL	1.195 €
WRN-2					G2	1.195 €
WRN-3					G3	1.294 €
WRN-4					G4	1.484 €
WRN-5					G5	1.678 €
WRM-1	WOODEN BASE ARMCHAIR		11	matt oak, cognac, ash or wenge	COM / COL	1.246 €
WRM-2					G2	1.246 €
WRM-3					G3	1.374 €
WRM-4					G4	1.570 €
WRM-5					G5	1.769 €
WRG-1	SWIVEL BASE ARMCHAIR		20.4	chrome	COM / COL	1.297 €
WRG-2					G2	1.297 €
WRG-3					G3	1.454 €
WRG-4					G4	1.655 €
WRG-5					G5	1.860 €

NB: Due to the fact that the wood used is natural, the finish may vary.

Fedele

BY VICTOR CARRASCO

Fedele

BY VICTOR CARRASCO

FEP - POUF

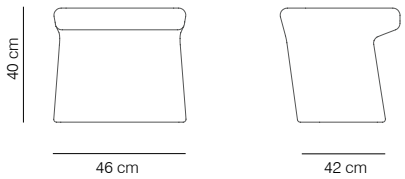

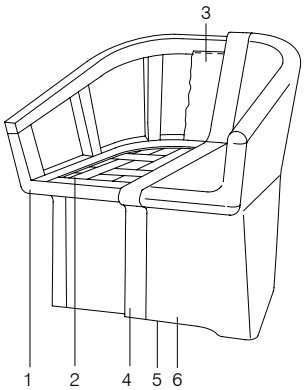

FE - ARMCHAIR

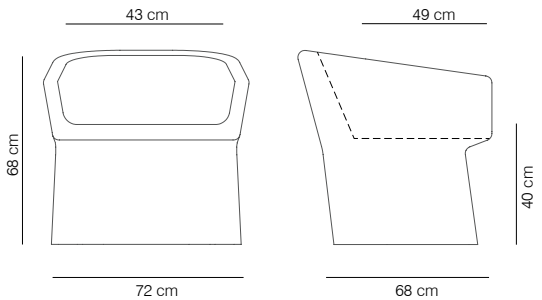

1- Interior structure in solid wood.
We use PEFC certified wood.
2- Woven seat structure.
3- Interlining.
4- Expanded polyurethane foam in different densities.
5- Velour.
6- Fabric or leather.

Needed fabric for material 1.40 m wide:
FEP: 1.3 m
FE: 2.9 m
FES: 5.1 m

Test certificates:
UNE EN 15373:2007*
* See the list of tests on page 282.

FES - SOFA

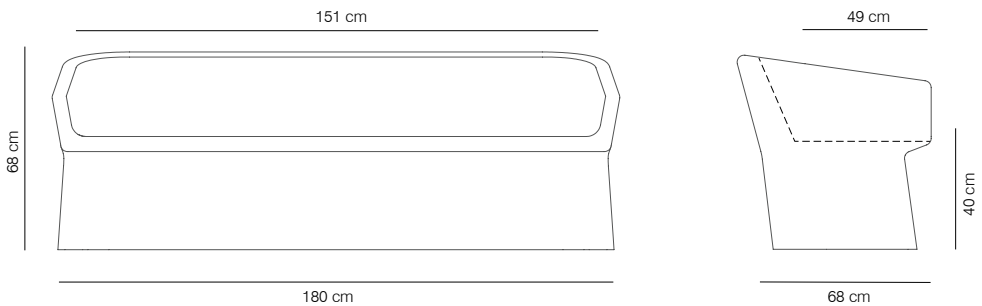

CODE	MODEL	PACKAGING	WEIGHT (kg)	FINISHES	PUBLIC PRICE (Fire Re. Foam)	PUBLIC PRICE
FEP-1	POUF	46x46x52 (0.11) x1	10	COM / COL	471 €	458 €
FEP-2				G2	471 €	458 €
FEP-3				G3	525 €	509 €
FEP-4				G4	606 €	589 €
FEP-5				G5	708 €	688 €
FE-1	ARMCHAIR	81x71x71 (0.41) x1	16.1	COM / COL	867 €	842 €
FE-2				G2	867 €	842 €
FE-3				G3	969 €	941 €
FE-4				G4	1.142 €	1.109 €
FE-5				G5	1.338 €	1.300 €
FES-1	SOFA	71x81x183 (1.05) x1	46	COM / COL	1.489 €	1.446 €
FES-2				G2	1.489 €	1.446 €
FES-3				G3	1.614 €	1.567 €
FES-4				G4	1.902 €	1.847 €
FES-5				G5	2.305 €	2.238 €

Colubi

BY RT DESIGN

Colubi

BY RT DESIGN

TA04 - ARMCHAIR

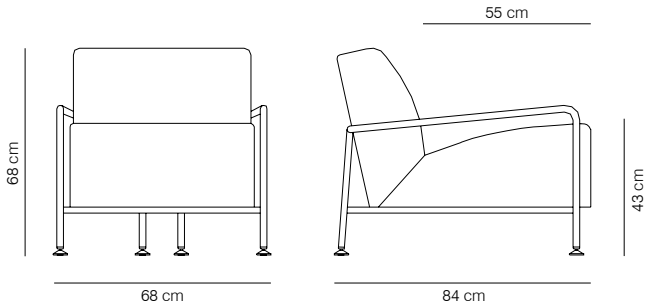

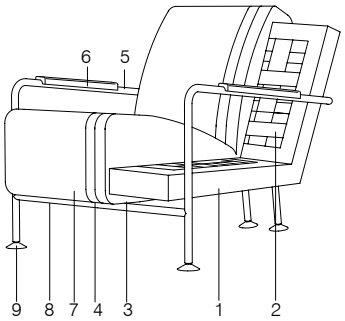

TA08 - ARMCHAIR 2 SEATS

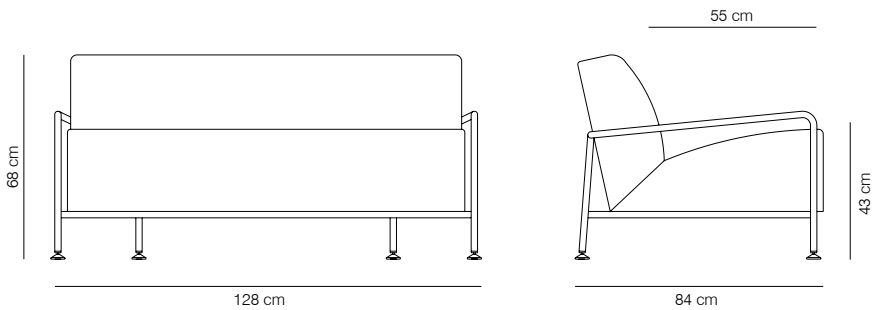

1- Interior structure of the back and seat in solid wood. We use PEFC certified wood.
2- Woven seat and back structure.
3- Expanded polyurethane foam in different densities.
4- Polyester fibre covering.
5- Structure in calibrated powder coated steel tube in thermoreinforced polyester in white and black.
6- Natural oak armrests.
7- Fabric or leather.
8- Velour.
9- Anti-slip foot glides.

Needed fabric for material 1.40 m wide:
TA04:2 m
TA08: 3.1 m

Test certificates:
UNE EN 15373:07

TABR - ARMREST

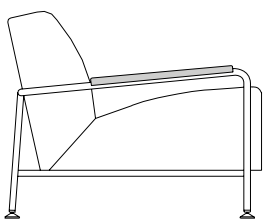

CODE	MODEL	PACKAGING	WEIGHT (kg)	FINISHES		PUBLIC PRICE (Fire Re. Foam)	PUBLIC PRICE
				STRUCTURE	UPHOLSTERY		
TA04-1	ARMCHAIR	87x71x73 (0.45) x1	16.8	white, black	COM / COL	981 €	953 €
TA04-2					G2	981 €	953 €
TA04-3					G3	1.161 €	1.127 €
TA04-4					G4	1.347 €	1.308 €
TA04-5					G5	1.567 €	1.522 €
TA08-1	ARMCHAIR 2 SEATS	76x89x134 (0.84) x1	27.6	white, black	COM / COL	1.386 €	1.345 €
TA08-2					G2	1.386 €	1.345 €
TA08-3					G3	1.693 €	1.644 €
TA08-4					G4	2.053 €	1.993 €
TA08-5					G5	2.315 €	2.248 €
TABR	ARMREST	Included on the armchair o sofa	-	matt oak, cognac, ash and wenge		-	87 €

NB: Due to the fact that the wood used is natural, the finish may vary.

Common

BY NAOTO FUKASAWA

Common

BY NAOTO FUKASAWA

Common is a modular collection of benches that allows different settings to be created through a variety of compositions.

To give you an example, some of the most common options are pictured below.

The tolerance of the different elements can be +/- 3 cm.

Test certificates: ANSI BIFMA X5.4-2012*

* See the list of tests on page 282.

Not produced in leather.

The CO240F and CO180F benches can be used in two positions. Indicate the desired option in the order, remembering that left / right is understood by looking at the element for manufacturing purposes.

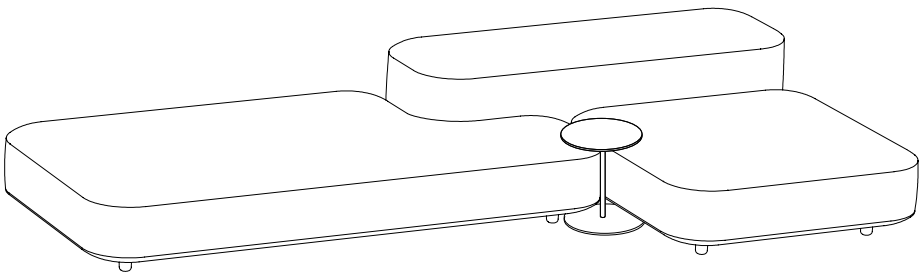

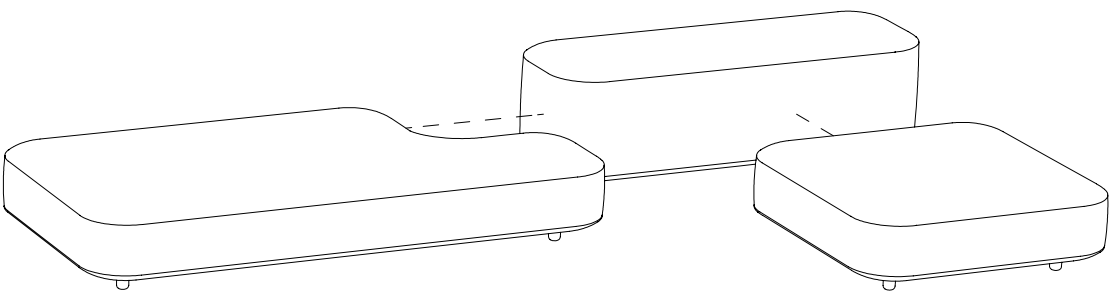

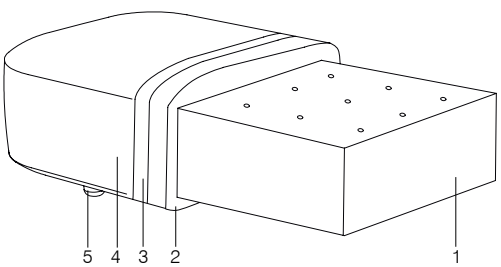

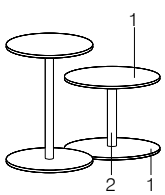

1- Base and top in MDF.
2- Calibrated steel column, powder coated in thermoreinforced polyester, finished in beech veneer, stained with matt varnish.

1- Interior structure in solid wood and perfored top of microparticles low in formaldehyde.
We use PEFC certified wood
2- Expanded polyurethane foam in different densities.
3- Polyester fibre covering.
4- Fabric.
5- Legs in matt varnished natural beech.

Available for the benches, felt glides. If not indicated, the benches will be produced with plastic glides.

Common

BY NAOTO FUKASAWA

CO240F - BENCH 240F

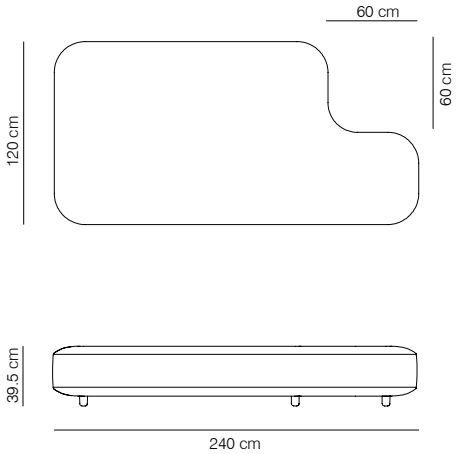

Needed fabric for material 1.4 wide:
CO240F: 7.0 m
CO180F: 6.6 m
CO180R: 5.6 m

CODE	MODEL	PACKAGING	WEIGHT (kg)	FINISHES	PUBLIC PRICE (Fire Re. Foam)	PUBLIC PRICE
CO240F-1	BENCH 240F	245x127x451(1.40) x1	77	COM / COL	2.470 €	2.398 €
CO240F-2				G2	2.470 €	2.398 €
CO240F-3				G3	2.746 €	2.666 €
CO240F-4				G4	3.158 €	3.066 €
CO240F-5				G5	3.569 €	3.465 €

CO180F - BENCH 180F

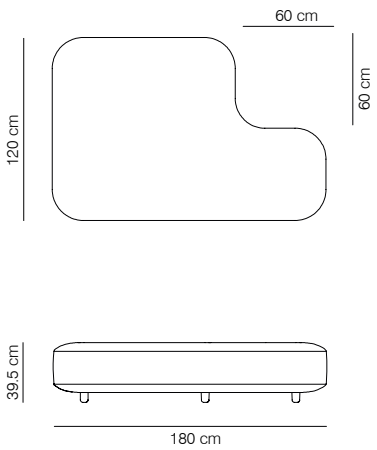

CODE	MODEL	PACKAGING	WEIGHT (kg)	FINISHES	PUBLIC PRICE (Fire Re. Foam)	PUBLIC PRICE
CO180F-1	BENCH 180F	181x127x45 (1.03) x1	56.2	COM / COL	2.031 €	1.972 €
CO180F-2				G2	2.031 €	1.972 €
CO180F-3				G3	2.258 €	2.192 €
CO180F-4				G4	2.596 €	2.521 €
CO180F-5				G5	2.934 €	2.849 €

CO180R - BENCH 180R

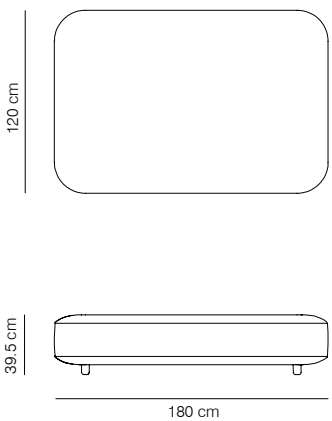

CODE	MODEL	PACKAGING	WEIGHT (kg)	FINISHES	PUBLIC PRICE (Fire Re. Foam)	PUBLIC PRICE
CO180R-1	BENCH 180R	181x127x45 (1.03) x1	69	COM / COL	1.950 €	1.893 €
CO180R-2				G2	1.950 €	1.893 €
CO180R-3				G3	2.166 €	2.103 €
CO180R-4				G4	2.492 €	2.420 €
CO180R-5				G5	2.817 €	2.735 €

Common

BY NAOTO FUKASAWA

CO120C - BENCH 120C

Needed fabric for material 1.4 wide:
CO120C: 4.0 m
CO180L: 4.0 m
CO180H: 4.5 m

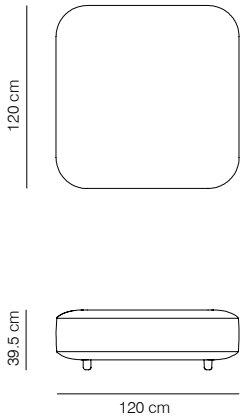

CODE	MODEL	PACKAGING	WEIGHT (kg)	FINISHES	PUBLIC PRICE (Fire Re. Foam)	PUBLIC PRICE
CO120C-1	BENCH 120C	125x125x45 (0.69) x1	42	COM / COL	1.373 €	1.333 €
CO120C-2				G2	1.373 €	1.333 €
CO120C-3				G3	1.526 €	1.481 €
CO120C-4				G4	1.754 €	1.703 €
CO120C-5				G5	1.982 €	1.924 €

CO180L - BENCH 180L

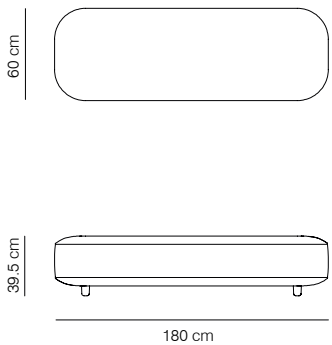

CODE	MODEL	PACKAGING	WEIGHT (kg)	FINISHES	PUBLIC PRICE (Fire Re. Foam)	PUBLIC PRICE
CO180L-1	BENCH 180L	65x185x45 (0.52) x1	33.6	COM / COL	1.456 €	1.413 €
CO180L-2				G2	1.456 €	1.413 €
CO180L-3				G3	1.617 €	1.570 €
CO180L-4				G4	1.860 €	1.806 €
CO180L-5				G5	2.102 €	2.041 €

CO180H - BENCH 180H

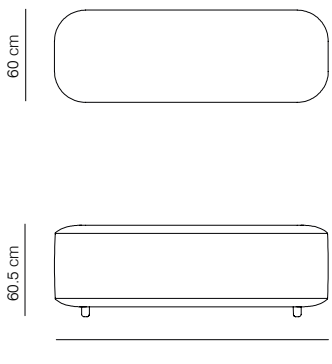

CODE	MODEL	PACKAGING	WEIGHT (kg)	FINISHES	PUBLIC PRICE (Fire Re. Foam)	PUBLIC PRICE
CO180H-1	BENCH 180H	65x185x65 (0.78) x1	37	COM / COL	1.510 €	1.466 €
CO180H-2				G2	1.510 €	1.466 €
CO180H-3				G3	1.677 €	1.628 €
CO180H-4				G4	1.930 €	1.873 €
CO180H-5				G5	2.182 €	2.118 €

Common

BY NAOTO FUKASAWA

CO180HP - BENCH 180HP

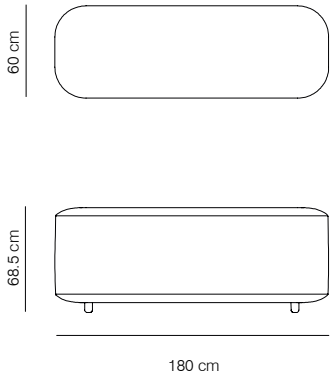

Needed fabric for material 1.4 wide:
CO180HP: 4.5 m
CO120L: 2.8 m
CO120H: 3.3 m

CODE	MODEL	PACKAGING	WEIGHT (kg)	FINISHES	PUBLIC PRICE (Fire Re. Foam)	PUBLIC PRICE
CO180HP-1	BENCH 180HP	72x185x65 (0.86) x1	47	COM / COL	1.599 €	1.553 €
CO180HP-2				G2	1.599 €	1.553 €
CO180HP-3				G3	1.777 €	1.725 €
CO180HP-4				G4	2.046 €	1.986 €
CO180HP-5				G5	2.312 €	2.245 €

CO120L - BENCH 120L

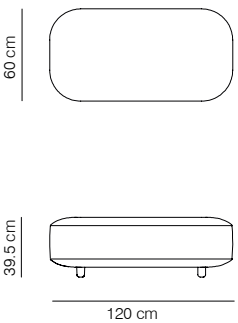

CODE	MODEL	PACKAGING	WEIGHT (kg)	FINISHES	PUBLIC PRICE (Fire Re. Foam)	PUBLIC PRICE
CO120L-1	BENCH 120L	125x65x45 (0.36) x1	22.3	COM / COL	1.208 €	1.173 €
CO120L-2				G2	1.208 €	1.173 €
CO120L-3				G3	1.342 €	1.303 €
CO120L-4				G4	1.543 €	1.498 €
CO120L-5				G5	1.744 €	1.693 €

CO120H - BENCH 120H

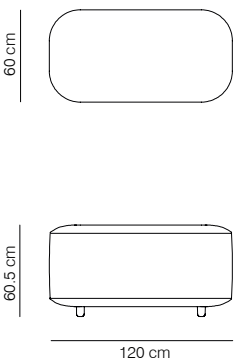

CODE	MODEL	PACKAGING	WEIGHT (kg)	FINISHES	PUBLIC PRICE (Fire Re. Foam)	PUBLIC PRICE
CO120H-1	BENCH 120H	125x65x66 (0.53) x1	28.6	COM / COL	1.263 €	1.226 €
CO120H-2				G2	1.263 €	1.226 €
CO120H-3				G3	1.402 €	1.362 €
CO120H-4				G4	1.614 €	1.567 €
CO120H-5				G5	1.823 €	1.770 €

Common

BY NAOTO FUKASAWA

CO120HP - BENCH 120HP

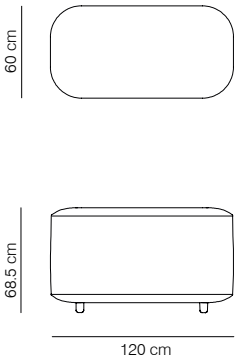

Needed fabric for material 1.4 wide:
CO120HP: 3.3 m

CODE	MODEL	PACKAGING	WEIGHT (kg)	FINISHES	PUBLIC PRICE (Fire Re. Foam)	PUBLIC PRICE
CO120HP-1	BENCH 120HP	125x72x65 (0.58) x1	26.3	COM / COL	1.338 €	1.300 €
CO120HP-2				G2	1.338 €	1.300 €
CO120HP-3				G3	1.487 €	1.443 €
CO120HP-4				G4	1.712 €	1.662 €
CO120HP-5				G5	1.932 €	1.876 €

Common

BY NAOTO FUKASAWA

TABLES

COD60H45 - TABLE 45

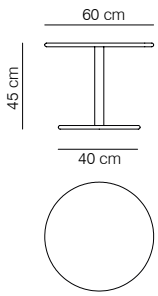

COD45H65 - TABLE 65

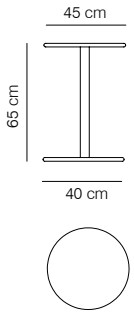

There is the possibility of combine boards of different colors. In that case, always consider the price of the upper category.

CODE	MODEL	PACKAGING	WEIGHT (kg)	FINISHES		PUBLIC PRICE
				COLUMN	TOP	
COD60H45	TABLE 45	64x64x7 (0.03) 64x64x7 (0.03) 48x11x12 (0.01) x3	7	matt beech	white, black and grey	376 €
					sand, tobacco, smoke grey and silver	394 €
					red, mustard, green, blue and bronze	415 €
COD45H65	TABLE 65	48x64x7 (0.03) 64x64x7 (0.03) 48x11x12 (0.02) x3	9	matt beech	white, black and grey	376 €
					sand, tobacco, smoke grey and silver	394 €
					red, mustard, green, blue and bronze	415 €

OPTIONS FOR FINISHES:

- COLUMN: beech veneer polished with matt varnish.
- TOP: - LACQUERED (microtexturozed): black.
  - LACQUERED (smooth and satin):
    COLORS 1: white and grey
    COLORS 2: sand, tobacco, smoke grey and silver
    COLORS 3: red, mustard, green, blue and bronze

Common

BY NAOTO FUKASAWA

SUGGESTIONS

All the compositions featuring tables shown below are priced in colour group 1 (white, black or grey).

COMPOSITION 1

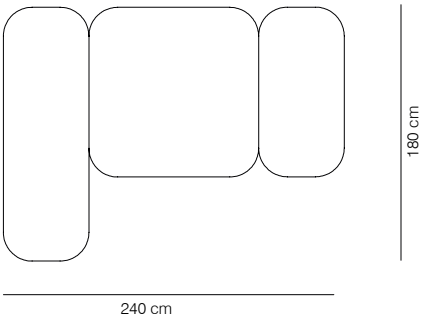

MODEL	FINISHES	PUBLIC PRICE (Fire Re. Foam)	PUBLIC PRICE
COMPOSITION 1	COM / COL	4.091 €	3.972 €
	G2	4.091 €	3.972 €
	G3	4.545 €	4.413 €
	G4	5.227 €	5.075 €
	G5	5.908 €	5.735 €

Components: 1 pc. CO180H, 1 pc. CO120C and 1 pc. CO120L.

COMPOSITION 2

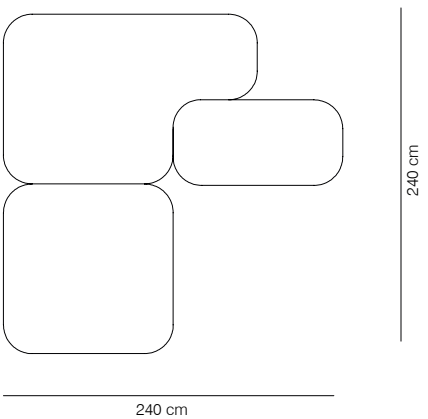

MODEL	FINISHES	PUBLIC PRICE (Fire Re. Foam)	PUBLIC PRICE
COMPOSITION 2	COM / COL	4.667 €	4.531 €
	G2	4.667 €	4.531 €
	G3	5.186 €	5.035 €
	G4	5.964 €	5.791 €
	G5	6.739 €	6.542 €

Components: 1 pc. CO180F, 1 pc. CO120H and 1 pc. CO120C.

COMPOSITION 3

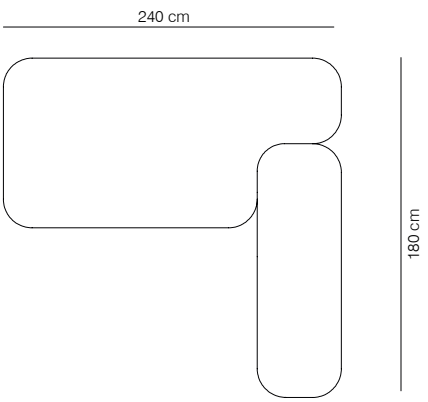

MODEL	FINISHES	PUBLIC PRICE (Fire Re. Foam)	PUBLIC PRICE
COMPOSITION 3	COM / COL	3.980 €	3.864 €
	G2	3.980 €	3.864 €
	G3	4.423 €	4.294 €
	G4	5.088 €	4.939 €
	G5	5.751 €	5.583 €

Components: 1 pc. CO180H and 1 pc. CO240F.

Common

BY NAOTO FUKASAWA

SUGGESTIONS

COMPOSITION 4

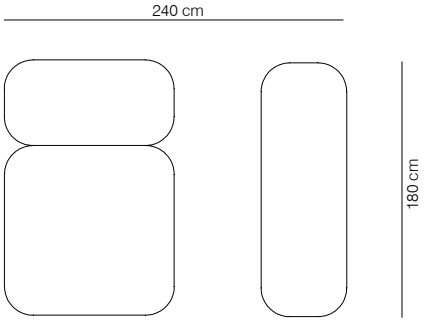

MODEL	FINISHES	PUBLIC PRICE (Fire Re. Foam)	PUBLIC PRICE
COMPOSITION 4	COM / COL	4.092 €	3.972 €
	G2	4.092 €	3.972 €
	G3	4.545 €	4.413 €
	G4	5.228 €	5.076 €
	G5	5.907 €	5.735 €

Components: 1 pc. CO120H, 1 pc. CO120C and 1 pc. CO180L.

COMPOSITION 5

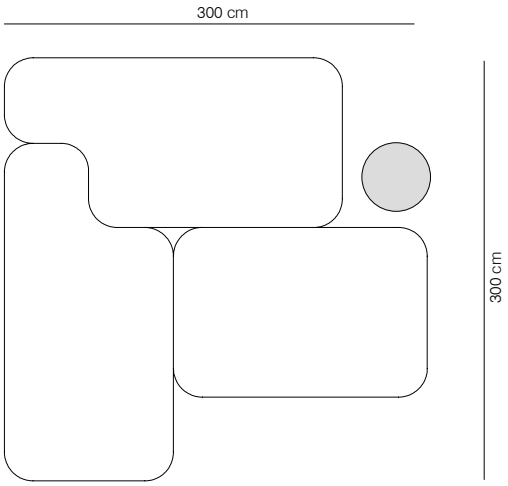

MODEL	FINISHES	PUBLIC PRICE (Fire Re. Foam)	PUBLIC PRICE
COMPOSITION 5	COM / COL	7.266 €	7.064 €
	G2	7.266 €	7.064 €
	G3	8.034 €	7.811 €
	G4	9.184 €	8.927 €
	G5	10.331 €	10.041 €

Components: 2 pcs. CO240F, 1 pc. CO180R and 1 pc. COD60H4

COMPOSITION 6

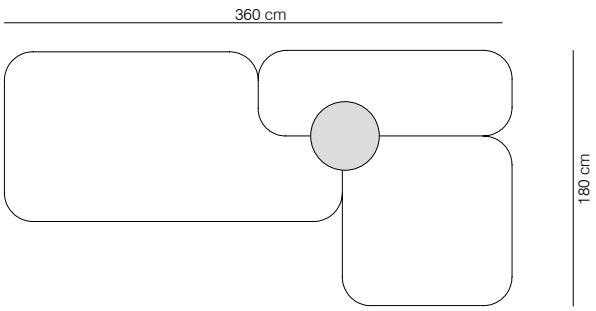

MODEL	FINISHES	PUBLIC PRICE (Fire Re. Foam)	PUBLIC PRICE
COMPOSITION 6	COM / COL	5.675 €	5.520 €
	G2	5.675 €	5.520 €
	G3	6.265 €	6.093 €
	G4	7.148 €	6.951 €
	G5	8.029 €	7.806 €

Components: 1 pc. CO240F, 1 pc. CO120C, 1 pc. CO180L,
1 pc. COD60H45.

Common

BY NAOTO FUKASAWA

SUGGESTIONS

COMPOSITION 7

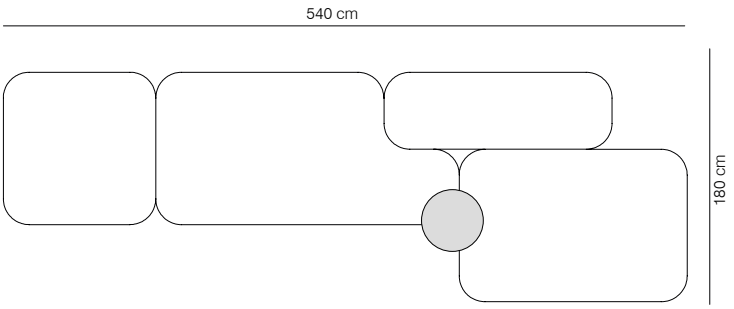

MODEL	FINISHES	PUBLIC PRICE (Fire Re. Foam)	PUBLIC PRICE
COMPOSITION 7	COM / COL	7.679 €	7.466 €
	G2	7.679 €	7.466 €
	G3	8.491 €	8.255 €
	G4	9.710 €	9.438 €
	G5	10.926 €	10.618 €

Components: 1 pc. CO240F, 1 pc. CO180R, 1 pc. CO120C, 1 pc. CO180H and 1 pc. COD60H45.

COMPOSITION 8

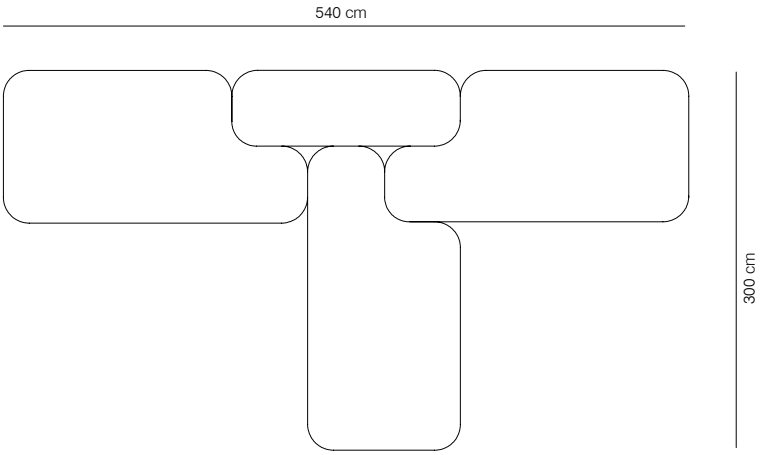

MODEL	FINISHES	PUBLIC PRICE (Fire Re. Foam)	PUBLIC PRICE
COMPOSITION 8	COM / COL	8.920 €	8.660 €
	G2	8.920 €	8.660 €
	G3	9.915 €	9.626 €
	G4	11.404 €	11.071 €
	G5	12.889 €	12.513 €

Components: 3 pcs. CO240F and 1 pc. CO180H.

COMPOSITION 9

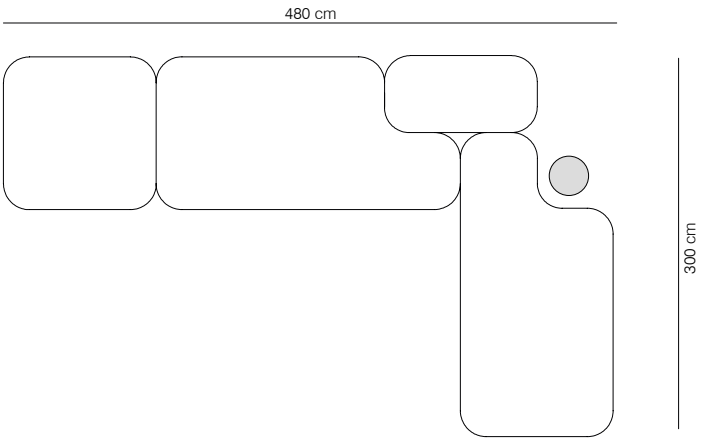

MODEL	FINISHES	PUBLIC PRICE (Fire Re. Foam)	PUBLIC PRICE
COMPOSITION 9	COM / COL	7.897 €	7.677 €
	G2	7.897 €	7.677 €
	G3	8.736 €	8.492 €
	G4	9.989 €	9.709 €
	G5	11.240 €	10.923 €

Components: 2 pcs. CO240F, 1 pc. CO120C, 1 pc. CO120L and 1 pc. COD60H45.

Season Bench

BY PIERO LISSONI

Season Bench

BY PIERO LISSONI

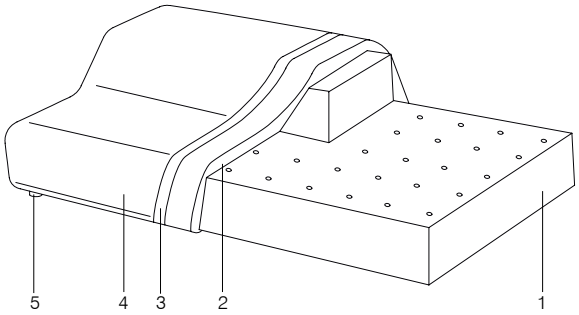

1- Interior structure in solid wood and perfored top of microparticles low in formaldehyde. We use PEFC certified wood.
2- Expanded polyurethane foam in different densities.
3- Polyester fibre covering.
4- Fabric or leather.
5- Height equalising legs.

Needed fabric for material 1.40m wide:
SE190: 5.4 m SE250: 7.3 m

Note: Leather and some technical upholster models are manufactured with different seams.

Test certificates: UNE EN 16139:13.

The bench will be provided with the raised part on the right or on the left. Indicate the desired option in the order, remembering that left / right is understood by looking at the element for manufacturing purposes.

SE190 - BENCH 190

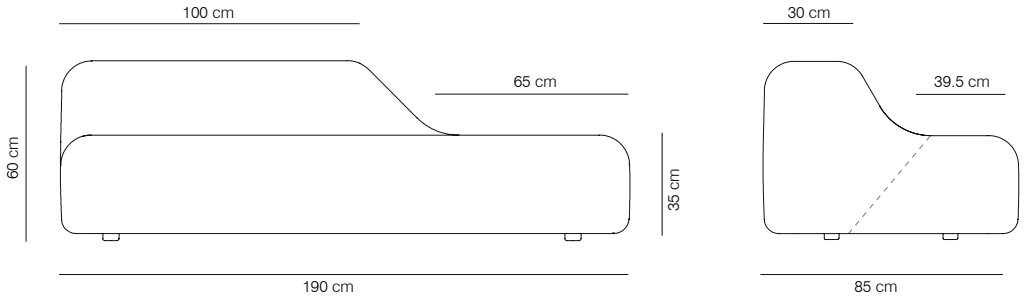

SE250 - BENCH 250

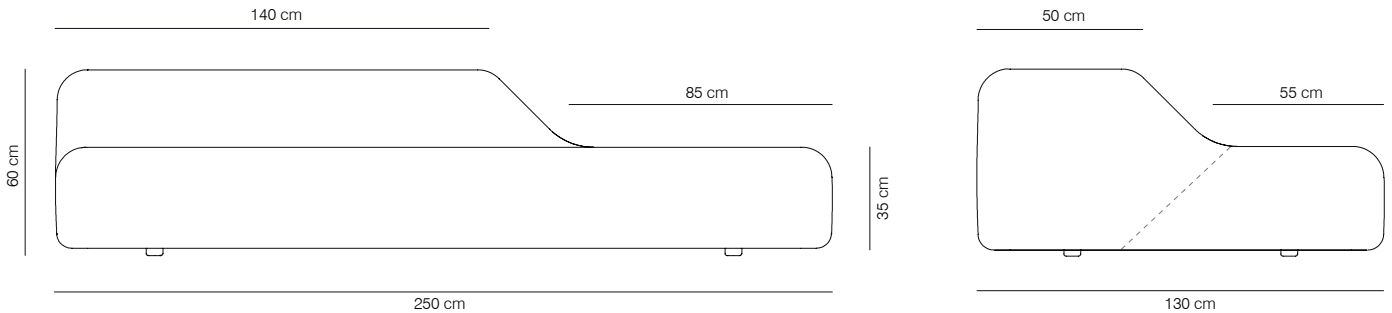

CODE	MODEL	PACKAGING	WEIGHT (kg)	FINISHES	PUBLIC PRICE (Fire Re. Foam)	PUBLIC PRICE
SE190-1	BENCH 190	64x99x192 (1.3) x1	72	COM / COL	2.005 €	1.947 €
SE190-2				G2	2.005 €	1.947 €
SE190-3				G3	2.208 €	2.143 €
SE190-4				G4	2.650 €	2.573 €
SE190-5				G5	2.914 €	2.829 €
SE250-1	BENCH 250	134x253x63 (2.31) x1	85	COM / COL	2.490 €	2.417 €
SE250-2				G2	2.490 €	2.417 €
SE250-3				G3	2.737 €	2.657 €
SE250-4				G4	3.285 €	3.189 €
SE250-5				G5	3.614 €	3.509 €

Season Mini

BY PIERO LISSONI

Season Mini

BY PIERO LISSONI

SEM50 - SEASON MINI 50 FIXED
SEMR50 - SEASON MINI 50 WITH CASTERS

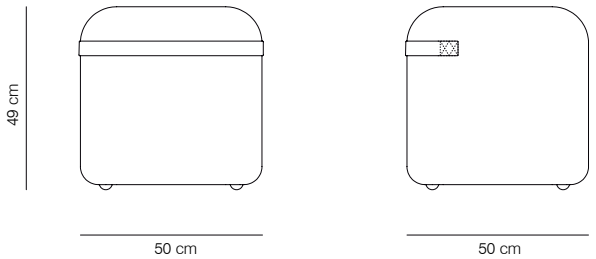

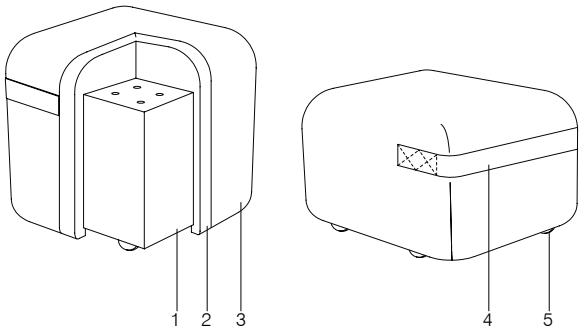

SEM60 - SEASON MINI 60 FIXED
SEMR60 - SEASON MINI 60 WITH CASTERS

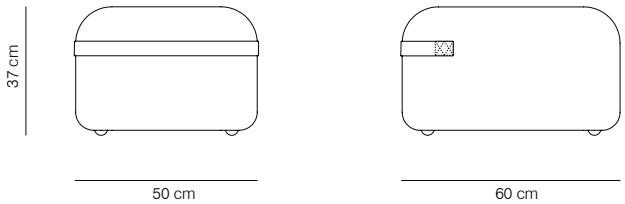

1- Interior structure in solid wood and perfored top of microparticles low in formaldehyde. We use PEFC certified wood.
2- Expanded polyurethane foam in different densities.
3- Fabric or leather.
4- Strap or belt produced in high-resistance technical fabric black, grey and red.
5- Hidden casters or height equalising legs.

Needed fabric for material 1.40m wide:
SEM50 | SEMR50: 1.70 m
SEM60 | SEMR60: 1.60 m

CODE	MODEL	PACKAGING	WEIGHT (kg)	FINISHES		PUBLIC PRICE (Fire Re. Foam)	PUBLIC PRICE
				STRAP	UPHOLSTERY		
SEM50-1	SEASON MINI POUF 50 FIXED	52x52x53 (0.14) x1	13.4	black, grey or red	COM / COL	402 €	390 €
SEM50-2					G2	402 €	390 €
SEM50-3					G3	504 €	490 €
SEM50-4					G4	617 €	599 €
SEM50-5					G5	721 €	700 €
SEM60-1	SEASON MINI POUF 60 FIXED	64x52x38 (0.13) x1	13.6		COM / COL	402 €	390 €
SEM60-2					G2	402 €	390 €
SEM60-3					G3	504 €	490 €
SEM60-4					G4	617 €	599 €
SEM60-5					G5	721 €	700 €
SEMR50-1	SEASON MINI POUF 50 WITH CASTERS	52x52x53 (0.14) x1	13.4		COM / COL	426 €	414 €
SEMR50-2					G2	426 €	414 €
SEMR50-3					G3	528 €	512 €
SEMR50-4					G4	641 €	623 €
SEMR50-5					G5	747 €	725 €
SEMR60-1	SEASON MINI POUF 60 WITH CASTERS	64x52x38 (0.13) x1	13.6		COM / COL	426 €	414 €
SEMR60-2					G2	426 €	414 €
SEMR60-3					G3	528 €	512 €
SEMR60-4					G4	641 €	623 €
SEMR60-5					G5	747 €	725 €

Trestle Bench

BY JOHN PAWSON

Trestle Bench

BY JOHN PAWSON

BENCHES

TRSL - SIMPLE BENCH / SMOOTH UPHOLSTERY
TRSC - SIMPLE BENCH / PADDED UPHOLSTERY

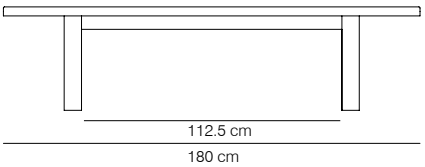

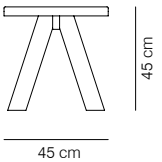

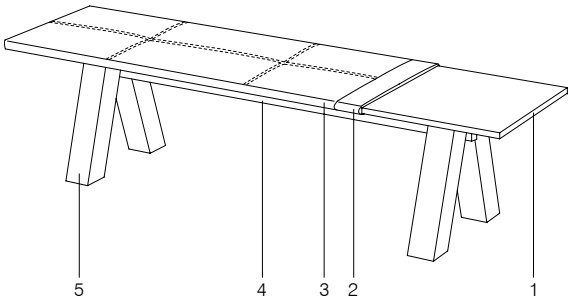

1- Inner structure of compact wooden board.
2- Expanded polyurethane foam in different densities.
3- Fabric or leather. Finish smooth or padded.
4- Beam in calibrated powder coated tube in thermoreinforced polyester in graphite grey.
5- Legs in solid oak wood with the finishes of our collection. Due to the fact that the wood used is natural, the finish may vary.

TRDL - DOUBLE BENCH / SMOOTH UPHOLSTERY
TRDC - DOUBLE BENCH / PADDED UPHOLSTERY

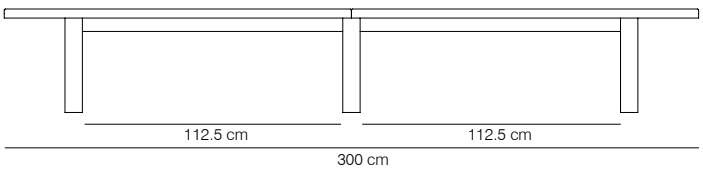

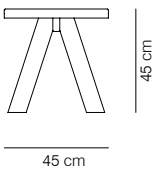

Test certificates:
UNE EN 16139:13
ANSI/BIFMA x5.4:2012

Needed fabric for material 1.40 m wide:

TRSL: 2.20 m
TRSC: 2.35 m
TRDL: 3.60 m
TRDC: 3.75 m
TRTL: 5 m
TRTC: 5.15 m

TRTL - TRIPLE BENCH / SMOOTH UPHOLSTERY
TRTC - TRIPLE BENCH / PADDED UPHOLSTERY

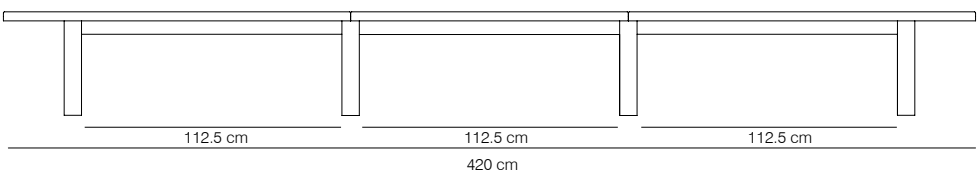

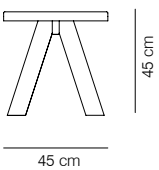

The designer suggests that neutral fabrics be used to upholster benches and backs, to maintain the design philosophy.

DIFFERENT OPTIONS OF FINISHES:

Padded

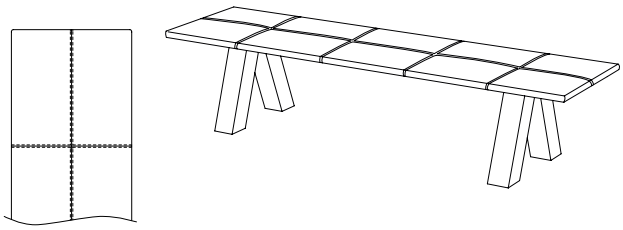

Smooth

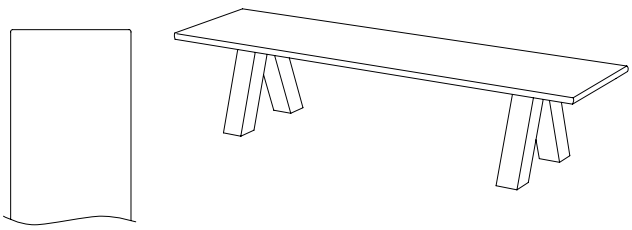

Trestle Bench

BY JOHN PAWSON

CODE	MODEL	PACKAGING	WEIGHT (kg)	FINISHES			PUBLIC PRICE (Fire Re. Foam)	PUBLIC PRICE
				LEGS	UPHOLSTERY			
TRSL-1	SIMPLE BENCH / SMOOTH UPHOLSTERY	193x64x7 (0.09) 46x47x45 (0.10) 130x7x9 (0.02)	32.5	stained (oak): matt oak, cognac, ash and wenge lacquered microtexturized (beech): white, black, grey, sand and smoke	smooth	COM / COL	1.234 €	1.198 €
TRSL-2						G2	1.234 €	1.198 €
TRSL-3						G3	1.352 €	1.313 €
TRSL-4						G4	1.467 €	1.424 €
TRSL-5						G5	1.582 €	1.536 €
TRSC-1	SIMPLE BENCH / PADDED UPHOLSTERY				padded	COM / COL	1.278 €	1.241 €
TRSC-2						G2	1.278 €	1.241 €
TRSC-3						G3	1.391 €	1.350 €
TRSC-4						G4	1.504 €	1.460 €
TRSC-5						G5	1.604 €	1.558 €
TRDL-1	DOUBLE BENCH / SMOOTH UPHOLSTERY	(x2) 165x64x7 (0.07) (x2) 46x47x45 (0.1) (x2)130x7x9 (0.02)	58.6	stained (oak): matt oak, cognac, ash and wenge lacquered microtexturized (beech): white, black, grey, sand and smoke	smooth	COM / COL	2.094 €	2.063 €
TRDL-2						G2	2.094 €	2.063 €
TRDL-3						G3	2.280 €	2.243 €
TRDL-4						G4	2.464 €	2.423 €
TRDL-5						G5	2.656 €	2.608 €
TRDC-1	DOUBLE BENCH / PADDED UPHOLSTERY				padded	COM / COL	2.160 €	2.128 €
TRDC-2						G2	2.160 €	2.128 €
TRDC-3						G3	2.346 €	2.308 €
TRDC-4						G4	2.532 €	2.488 €
TRDC-5						G5	2.724 €	2.675 €
TRTL-1	TRIPLE BENCH / SMOOTH UPHOLSTERY	(x2) 165x64x7 (0.07) 134x64x7 (0.06) (x2) 46x47x45 (0.1) (x3) 130x19x9 (0.02)	75	stained (oak): matt oak, cognac, ash and wenge lacquered microtexturized (beech): white, black, grey, sand and smoke	smooth	COM / COL	2.881 €	2.837 €
TRTL-2						G2	2.881 €	2.837 €
TRTL-3						G3	3.142 €	3.090 €
TRTL-4						G4	3.404 €	3.346 €
TRTL-5						G5	3.674 €	3.606 €
TRTC-1	TRIPLE BENCH / PADDED UPHOLSTERY				padded	COM / COL	2.980 €	2.934 €
TRTC-2						G2	2.980 €	2.934 €
TRTC-3						G3	3.242 €	3.187 €
TRTC-4						G4	3.506 €	3.443 €
TRTC-5						G5	3.775 €	3.706 €

NB: Due to the fact that the wood used is natural, the finish may vary.

Trestle Bench

BY JOHN PAWSON

BACKRESTS

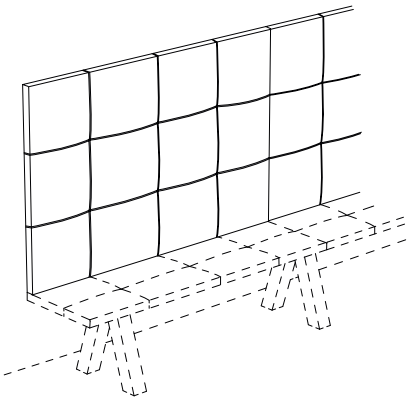

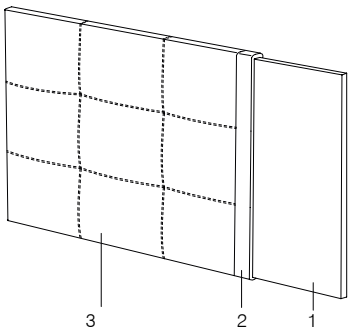

1- Interior structure in MDF.
2- Expanded polyurethane foam.
3- Fabric or leather. Finish smooth or padded.

TRRCL - **CENTRAL SEAT BACKREST L120 / SMOOTH UPHOLSTERY**

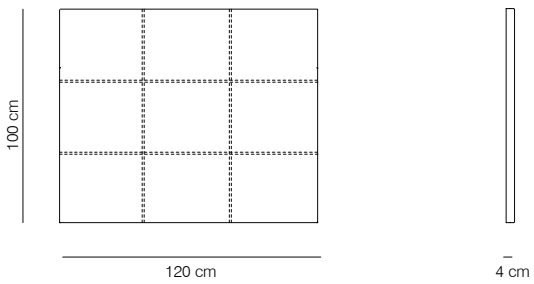

TRREL - **END SEAT BACKREST L150 / SMOOTH UPHOLSTERY**

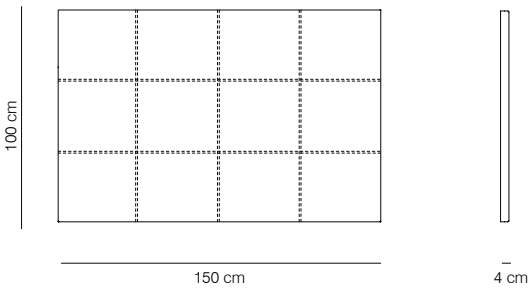

TRRSL - **SIMPLE SEAT BACKREST L180 / SMOOTH UPHOLSTERY**

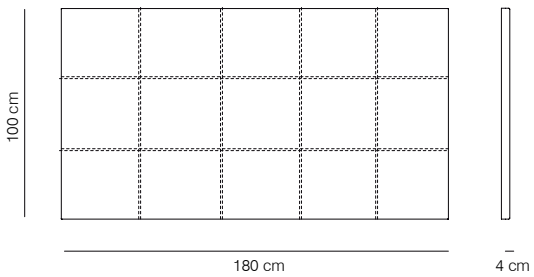

CUSTOM

Custom foams and shapes of the backrest are available upon request. If you would like this, please indicate it on the order and attach a sketch.

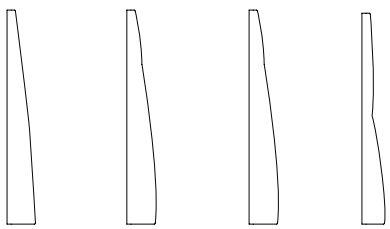

Needed fabric for material 1.40 m wide:

TRRCL: 1.6 m
TRRCC: 1.75 m
TRREL: 1.9 m
TRREC: 2.05 m
TRRSL: 2.2 m
TRRSC: 2.4 m

Trestle Bench

BY JOHN PAWSON

CODE	MODEL	PACKAGING	WEIGHT (kg)	FINISHES		PUBLIC PRICE (Fire Re. Foam)	PUBLIC PRICE
TRRCL-1	CENTRAL SEAT BACKREST L120 / SMOOTH UPHOLSTERY	105x130x10 (0.13)	20	smooth	COM / COL	451 €	438 €
TRRCL-2					G2	451 €	438 €
TRRCL-3					G3	555 €	539 €
TRRCL-4					G4	661 €	642 €
TRRCL-5					G5	771 €	749 €
TRRCC-1	CENTRAL SEAT BACKREST L120 / PADDED UPHOLSTERY			padded	COM / COL	496 €	481 €
TRRCC-2					G2	496 €	481 €
TRRCC-3					G3	601 €	583 €
TRRCC-4					G4	709 €	689 €
TRRCC-5					G5	817 €	793 €
TRREL-1	END SEAT BACKREST L150 / SMOOTH UPHOLSTERY	105x160x10 (0.16)	25	smooth	COM / COL	493 €	479 €
TRREL-2					G2	493 €	479 €
TRREL-3					G3	619 €	601 €
TRREL-4					G4	749 €	727 €
TRREL-5					G5	879 €	853 €
TRREC-1	END SEAT BACKREST L150 / PADDED UPHOLSTERY			padded	COM / COL	539 €	523 €
TRREC-2					G2	539 €	523 €
TRREC-3					G3	666 €	647 €
TRREC-4					G4	796 €	773 €
TRREC-5					G5	927 €	900 €
TRRSL-1	SIMPLE SEAT BACKREST L180 / SMOOTH UPHOLSTERY	105x190x10 (0.19)	30	smooth	COM / COL	536 €	521 €
TRRSL-2					G2	536 €	521 €
TRRSL-3					G3	685 €	665 €
TRRSL-4					G4	836 €	811 €
TRRSL-5					G5	990 €	961 €
TRRSC-1	SIMPLE SEAT BACKREST L180 / PADDED UPHOLSTERY			padded	COM / COL	581 €	564 €
TRRSC-2					G2	581 €	564 €
TRRSC-3					G3	730 €	709 €
TRRSC-4					G4	883 €	857 €
TRRSC-5					G5	1.037 €	1.007 €

Trestle Bench

BY JOHN PAWSON

COMPONENTS FOR COMPOSITIONS OF BENCHES

For different compositions to those suggested above, is offered the possibility to create your own compositions.
For all of them will have to choose two end seats, central seats according to the length of the bench, and the legs (the number of legs will be the result of the number of total seats plus 1).

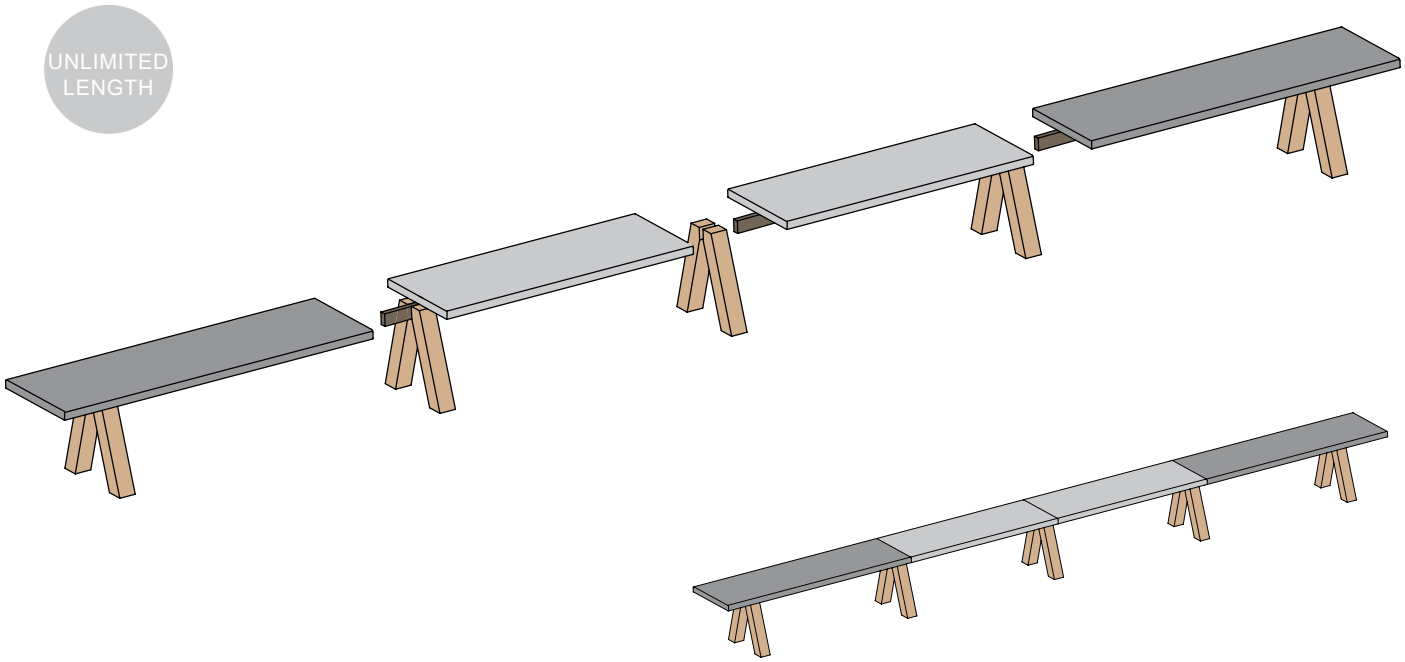

Colour code:

- Central seat (TRCL - TRCC)
- End seat (TREL - TREC)
- Legs (TRP)

Needed fabric for material 1.40 m wide:

TREL: 1.90 m
TRCL: 1.60 m
TREC: 2.15 m
TRCC:1.75 m

TRCL - CENTRAL SEAT L120 / SMOOTH UPHOLSTERY

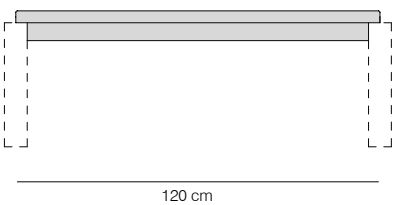

TREL - END SEAT L150 / SMOOTH UPHOLSTERY
TREC - END SEAT L150 / PADDED UPHOLSTERY

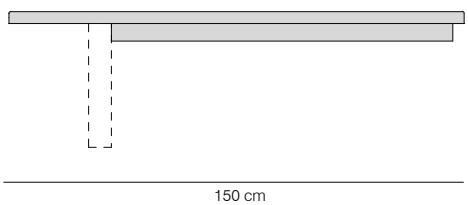

TRP - LEGS

Trestle Bench

BY JOHN PAWSON

CODE	MODEL	PACKAGING	WEIGHT (kg)	FINISHES		PUBLIC PRICE (Fire Re. Foam)	PUBLIC PRICE
TREL-1	END SEAT L150 / SMOOTH UPHOLSTERY	165x64x7 (0.08) 130x7x9 (0.02)	18.8	smooth	COM / COL	534 €	518 €
TREL-2					G2	534 €	518 €
TREL-3					G3	627 €	608 €
TREL-4					G4	719 €	698 €
TREL-5					G5	815 €	791 €
TREC-1	END SEAT L150 / PADDED UPHOLSTERY			padded	COM / COL	567 €	551 €
TREC-2					G2	567 €	551 €
TREC-3					G3	660 €	641 €
TREC-4					G4	753 €	731 €
TREC-5					G5	849 €	824 €
TRCL-1	CENTRAL SEAT L120 / SMOOTH UPHOLSTERY	134x64x7 (0.06) 130X7X9 (0.02)	14.6	smooth	COM / COL	445 €	432 €
TRCL-2					G2	445 €	432 €
TRCL-3					G3	520 €	505 €
TRCL-4					G4	598 €	581 €
TRCL-5					G5	676 €	656 €
TRCC-1	CENTRAL SEAT L120 / PADDED UPHOLSTERY			padded	COM / COL	478 €	464 €
TRCC-2					G2	478 €	464 €
TRCC-3					G3	554 €	538 €
TRCC-4					G4	632 €	613 €
TRCC-5					G5	709 €	689 €

CODE	MODEL	PACKAGING	WEIGHT (kg)	FINISHES		PUBLIC PRICE
TRP	LEGS	46x47x45 (0.1)	13	stained (oak)	matt oak, cognac, ash and wenge	342 €
				lacquered microtexturized (beech)	white, black, grey, sand and smoke	
NB: Due to the fact that the wood used is natural, the finish may vary.						

Trestle Bench

BY JOHN PAWSON

SUGGESTIONS

The prices of the compositions shown below are valued for smooth upholstery.

COMPOSITION 1

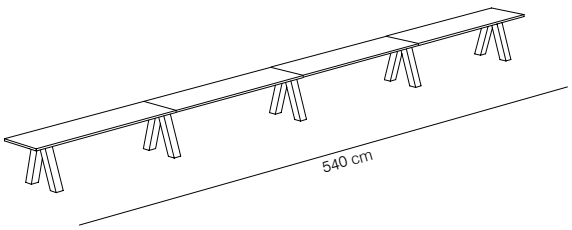

MODEL	WEIGHT (kg)	FINISHES	PUBLIC PRICE	PUBLIC PRICE
COMPOSITION 1	85.5	COM / COL	3.668 €	3.611 €
		G2	3.668 €	3.611 €
		G3	4.004 €	3.937 €
		G4	4.344 €	4.268 €
		G5	4.692 €	4.604 €

Components: 2 pcs TREL (end seat), 2 pcs TRCL (central seat), 5 pcs TRP (legs).

COMPOSITION 2

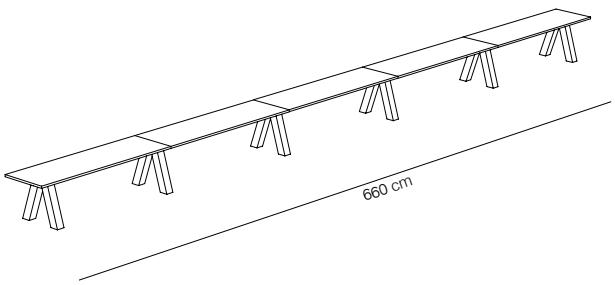

MODEL	WEIGHT (kg)	FINISHES	PUBLIC PRICE (Fire Re. Foam)	PUBLIC PRICE
COMPOSITION 2	104.2	COM / COL	4.455 €	4.385 €
		G2	4.455 €	4.385 €
		G3	4.866 €	4.784 €
		G4	5.284 €	5.191 €
		G5	5.710 €	5.603 €

Components: 2 pcs TREL (end seat), 3 pcs TRCL (central seat), 6 pcs TRP (legs).

COMPOSITION 3

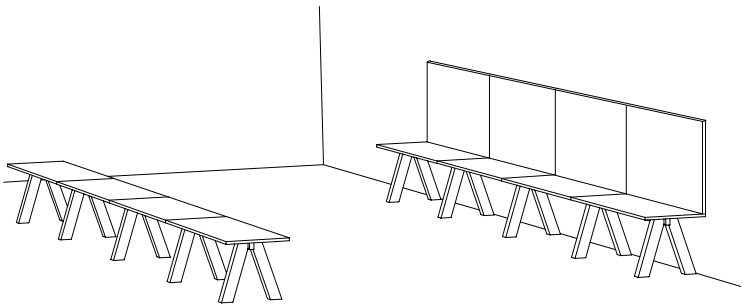

MODEL	WEIGHT (kg)	FINISHES	PUBLIC PRICE (Fire Re. Foam)	PUBLIC PRICE
COMPOSITION 3	241	COM / COL	9.224 €	9.056 €
		G2	9.224 €	9.056 €
		G3	10.356 €	10.154 €
		G4	11.508 €	11.274 €
		G5	12.684 €	12.412 €

Components: 4 pcs TREL (end seat), 4 pcs TRCL (central seat), 10 pcs TRP (legs), 2 pcs TRRCL (central seat backrest), 2 pcs TRREL (end seat backrest).

COMPOSITION 4

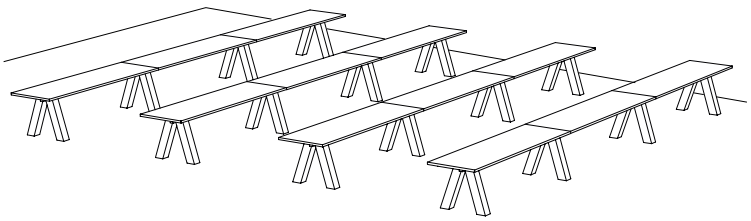

MODEL	WEIGHT (kg)	FINISHES	PUBLIC PRICE (Fire Re. Foam)	PUBLIC PRICE
COMPOSITION 4	267.2	COM / COL	11.524 €	11.348 €
		G2	11.524 €	11.348 €
		G3	12.568 €	12.360 €
		G4	13.616 €	13.384 €
		G5	14.696 €	14.424 €

Components: 8 pcs TREL (end seat), 4 pcs TRCL (central seat), 16 pcs TRP (legs).

Trestle Table

BY JOHN PAWSON

Trestle Table

BY JOHN PAWSON

The elegance of Pawson surprises us once again with this immense table and bench of exquisite proportions, for tables 74 cm height and 88 cm counter height.

The table top is available in two different finishes and width (90 cm and 120 cm):

· 30 mm MDF board with a natural oak veneer polished in matt, cognac, ash or wenge. Micro-textured lacquer in white black, grey, sand or smoke also available.

· High pressure HPL laminate in white or black on a 30 mm thick MDF board with stained edges in transparent.

Stained solid oak or solid beech legs lacquered with the finishes of our collection.
Due to the fact that the wood used is natural, the finish may vary.

Beam in calibrated powder coated tube in thermoreinforced polyester in graphite grey (RAL9007).

Trestle collection meets with the standards UNE EN 527-1:11, UNE EN 527-2-3:03 and ANSI/BIFMA X5.5:2014.

Thickness and type of table top edge:

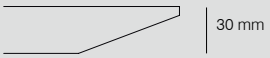

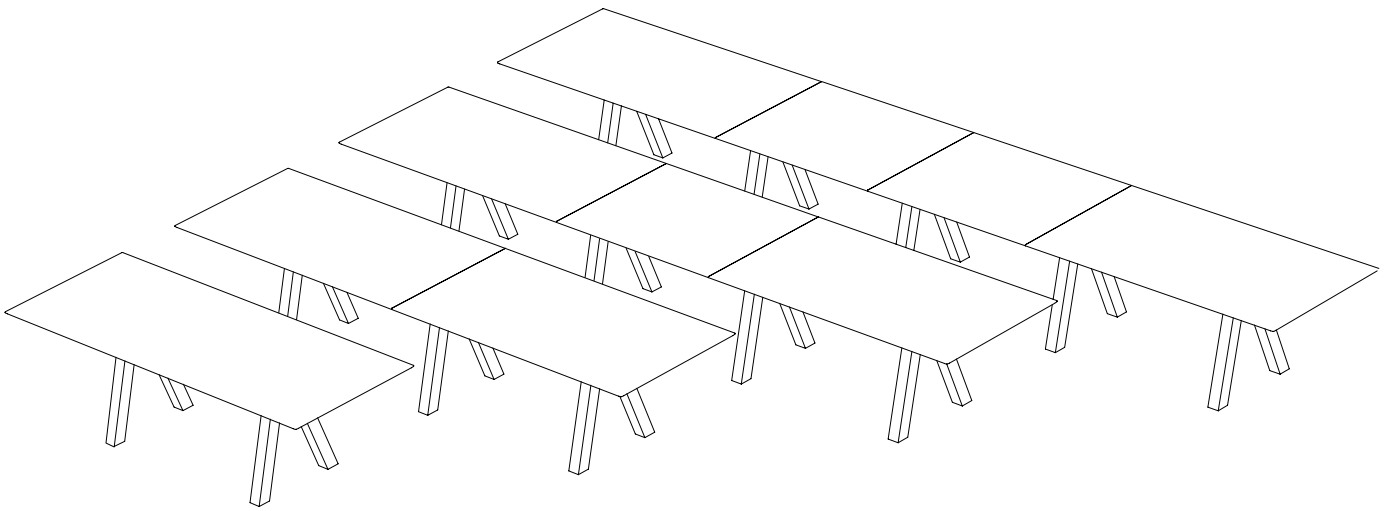

Different measures available for the height of the table:

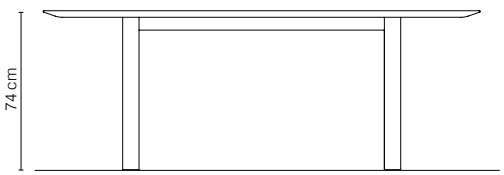

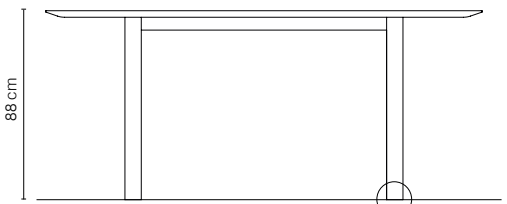

Different measures available for the width of the table top:

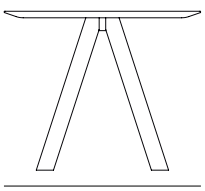

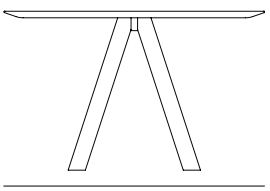

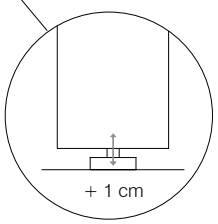

LEGS ADJUSTABLES IN HEIGHT

Trestle Table

BY JOHN PAWSON

TABLES HEIGHT 74

TRMSC - SIMPLE TABLE 200 WIDTH 90
TRMSC_A - SIMPLE TABLE 200 WIDTH 120

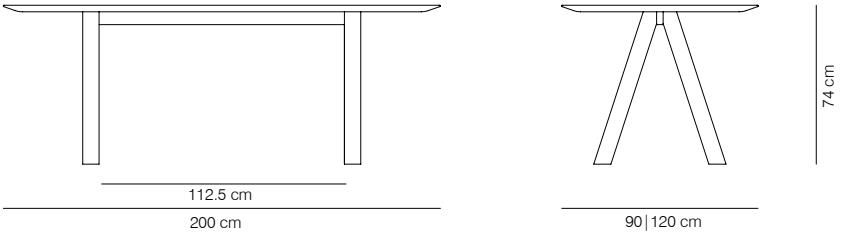

TRMS - SIMPLE TABLE 240 WIDTH 90
TRMS_A - SIMPLE TABLE 240 WIDTH 120

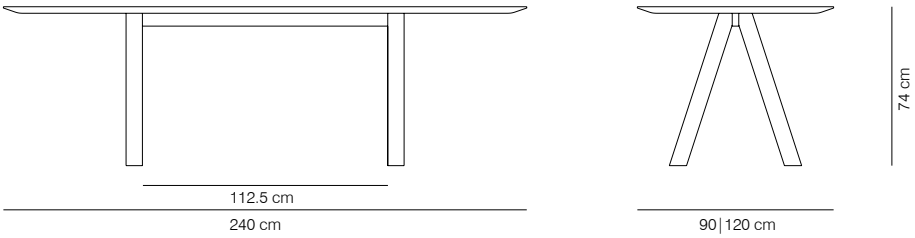

TRMD - DOUBLE TABLE WIDTH 90
TRMD_A - DOUBLE TABLE WIDTH 120

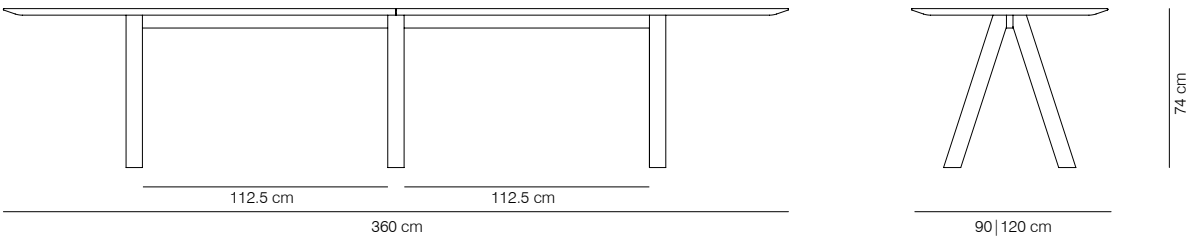

TRMT - TRIPLE TABLE WIDTH 90
TRMT_A - TRIPLE TABLE WIDTH 120

For tables equal to, or longer than 480 cm, the production delay is six weeks.

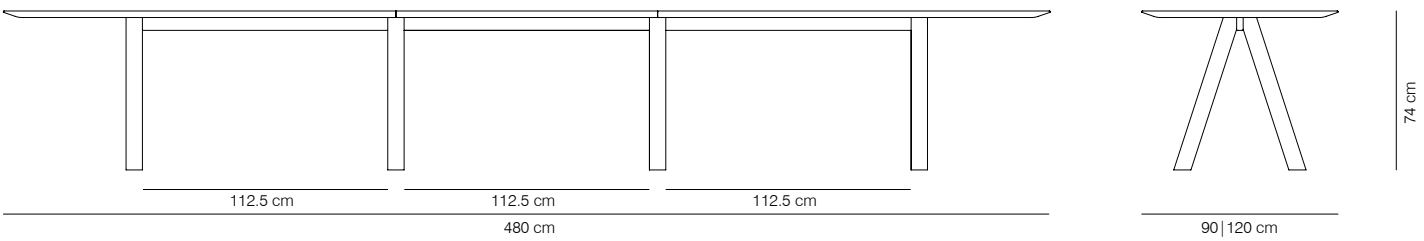

Trestle Table

BY JOHN PAWSON

CODE	MODEL	PACKAGING	WEIGHT (kg)	FINISHES			PUBLIC PRICE
				LEGS	TABLE TOP		
TRMSCRO	SIMPLE TABLE 200 WIDTH 90 HEIGHT 74	220x107x9 (0.21) (x2) 69x29x78 (0.15) 130x7x9 (0.02)	63.6	stained (oak): matt oak, cognac, ash and wenge	stained	matt oak	1.706 €
						cognac, ash and wenge	1.794 €
TRMSCTX				lacquered microtexturized (beech): white, black, grey, sand and smoke	lacquered (microtexturized)	white, black and grey	1.750 €
						sand, smoke grey	1.794 €
TRMSCHPL					HPL with MDF	white, black	2.721 € *
TRMSRO	SIMPLE TABLE 240 WIDTH 90 HEIGHT 74	257x107x9 (0.25) (x2) 69x29x78 (0.15) 130x7x9 (0.02)	74.6	stained (oak): matt oak, cognac, ash and wenge	stained	matt oak	1.796 €
						cognac, ash and wenge	1.889 €
TRMSTX				lacquered microtexturized (beech): white, black, grey, sand and smoke	lacquered (microtexturized)	white, black and grey	1.842 €
						sand, smoke grey	1.889 €
TRMSHPL					HPL with MDF	white, black	2.768 € *
TRMDRO	DOUBLE TABLE WIDTH 90 HEIGHT 74	(x2) 200x107x9 (0.19) (x3) 69x29x78 (0.15) 130x19x9 (0.02)	107.9	stained (oak): matt oak, cognac, ash and wenge	stained	matt oak	2.776 €
						cognac, ash and wenge	2.912 €
TRMDTX				lacquered microtexturized (beech): white, black, grey, sand and smoke	lacquered (microtexturized)	white, black and grey	2.840 €
						sand, smoke grey	2.912 €
TRMDHPL					HPL with MDF	white, black	5.092 € *
TRMTRO	TRIPLE TABLE WIDTH 90 HEIGHT 74	(x2) 200x107x9 (0.19) 139x107x9 (0.12) (x2) 69x29x78 (0.15) (x2) 130x7x9 (0.02)	150.2	stained (oak): matt oak, cognac, ash and wenge	stained	matt oak	3.794 €
						cognac, ash and wenge	3.986 €
TRMTTX				lacquered microtexturized (beech): white, black, grey, sand and smoke	lacquered (microtexturized)	white, black and grey	3.886 €
						sand, smoke grey	3.986 €
TRMTHPL					HPL with MDF	white, black	6.673 € *
TRMSCROA	SIMPLE TABLE 200 WITH 120 HEIGHT 74	220x139x9 (0.28) (x2) 69x29x78 (0.15) 130x7x9 (0.02)	91.6	stained (oak): matt oak, cognac, ash and wenge	stained	matt oak	2.242 €
						cognac, ash and wenge	2.357 €
TRMSCTXA				lacquered microtexturized (beech): white, black, grey, sand and smoke	lacquered (microtexturized)	white, black and grey	2.298 €
						sand, smoke grey	2.357 €
TRMSCHPLA					HPL with MDF	white, black	3.577 € *
TRMSROA	SIMPLE TABLE 240 WIDTH 120 HEIGHT 74	271x148x29 (1.16) (x2) 69x29x78 (0.15) 130x19x9 (0.02)	122.6	stained (oak): matt oak, cognac, ash and wenge	stained	matt oak	2.464 €
						cognac, ash and wenge	2.590 €
TRMSTXA				lacquered microtexturized (beech): white, black, grey, sand and smoke	lacquered (microtexturized)	white, black and grey	2.526 €
						sand, smoke grey	2.590 €
TRMSHPLA					HPL with MDF	white, black	3.795 € *
TRMDROA	DOUBLE TABLE WIDTH 120 HEIGHT 74	(x2) 200x139x9 (0.25) (x3) 69x29x78 (0.15) 130x19x9 (0.02	159.9	stained (oak): matt oak, cognac, ash and wenge	stained	matt oak	3.337 €
						cognac, ash and wenge	3.517 €
TRMDTXA				lacquered microtexturized (beech): white, black, grey, sand and smoke	lacquered (microtexturized)	white, black and grey	3.426 €
						sand, smoke grey	3.517 €
TRMDHPLA					HPL with MDF	white, black	6.372 € *
TRMTROA	TRIPLE TABLE WIDTH 120 HEIGHT 74	(x2) 200x139x9 (0.25) 139x139x9 (0.17) (x4) 100x25x66 (0.17) (x2) 9x18x122 (0.02)	213.4	stained (oak): matt oak, cognac, ash and wenge	stained	matt oak	4.573 €
						cognac, ash and wenge	4.826 €
TRMTTXA				lacquered microtexturized (beech): white, black, grey, sand and smoke	lacquered (microtexturized)	white, black and grey	4.698 €
						sand, smoke grey	4.825 €
TRMTHPLA					HPL with MDF	white, black	8.346 € *

* The prices shown for MDF boards with HPL are calculated for orders less than 5 units. Please check prices for larger quantities.
Due to the fact that the wood used is natural, the finish may vary.

Trestle Table

BY JOHN PAWSON

TABLES HEIGHT 88

TRMSC_H - SIMPLE TABLE 200 WIDTH 90
TRMSC_AH - SIMPLE TABLE 200 WIDTH 120

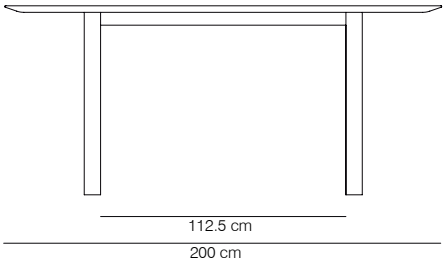

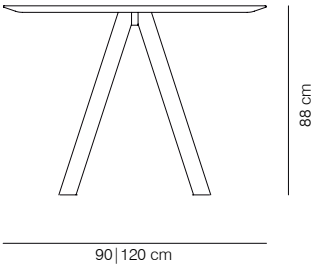

TRMS_H - SIMPLE TABLE 240 WIDTH 90
TRMS_AH - SIMPLE TABLE 240 WIDTH 120

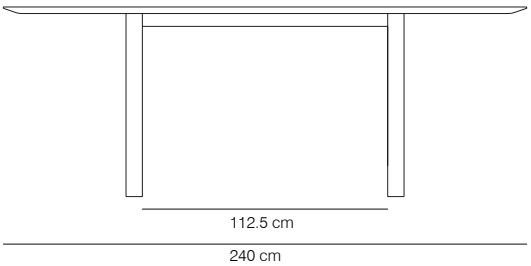

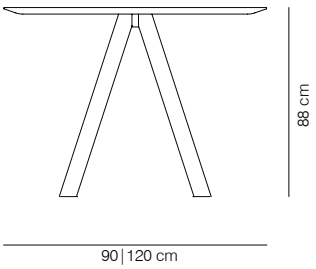

TRMD_H - DOUBLE TABLE WIDTH 90
TRMD_AH - DOUBLE TABLE WIDTH 120

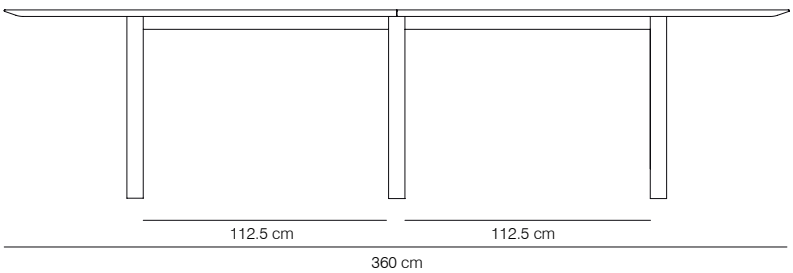

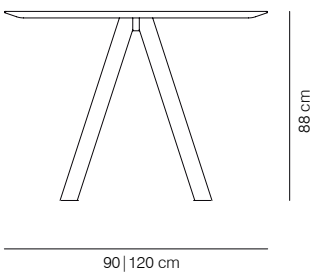

TRMT_H - TRIPLE TABLE WIDTH 90
TRMT_AH - TRIPLE TABLE WIDTH 120

For tables equal to, or longer than 480 cm, the production delay is six weeks.

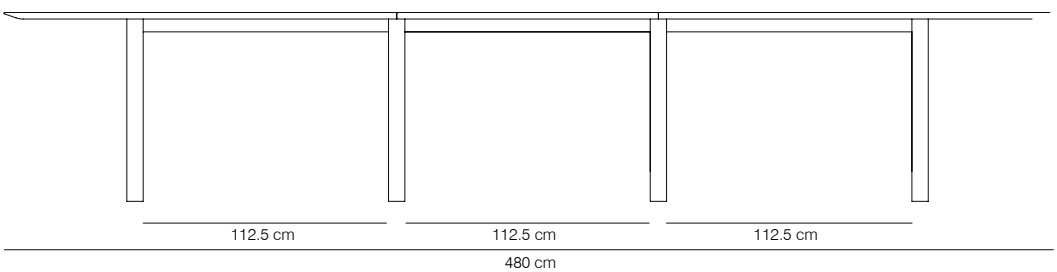

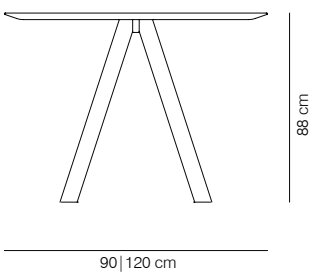

Trestle Table

BY JOHN PAWSON

CODE	MODEL	PACKAGING	WEIGHT (kg)	FINISHES			PUBLIC PRICE
				LEGS	TABLE TOP		
TRMSCROH	SIMPLE TABLE 200 WIDTH 90 HEIGHT 88	220x107x9 (0.21) (x2) 93x29x78 (0.21) 130x7x9 (0.02)	66.2	stained (oak): matt oak, cognac, ash and wenge lacquered microtexturized (beech): white, black, grey, sand and smoke	stained	matt oak	1.962 €
						cognac, ash and wenge	2.063 €
TRMSCTXH					lacquered (microtexturized)	white, black and grey	2.012 €
						sand, smoke grey	2.063 €
TRMSCHPLH					HPL with MDF	white, black	3.130 € *
TRMSROH	SIMPLE TABLE 240 WIDTH 90 HEIGHT 88	257x107x9 (0.25) (x2) 93x29x78 (0.21) 130x7x9 (0.02)	77.2	stained (oak): matt oak, cognac, ash and wenge lacquered microtexturized (beech): white, black, grey, sand and smoke	stained	matt oak	2.065 €
						cognac, ash and wenge	2.172 €
TRMSTXH					lacquered (microtexturized)	white, black and grey	2.118 €
						sand, smoke grey	2.172 €
TRMSHPLH					HPL with MDF	white, black	3.182 € *
TRMDROH	DOUBLE TABLE WIDTH 90 HEIGHT 88	(x2) 200x107x9 (0.19) (x3) 93x29x78 (0.21) 130x9x9 (0.02)	111.8	stained (oak): matt oak, cognac, ash and wenge lacquered microtexturized (beech): white, black, grey, sand and smoke	stained	matt oak	2.992 €
						cognac, ash and wenge	3.128 €
TRMDTXH					lacquered (microtexturized)	white, black and grey	3.056 €
						sand, smoke grey	3.128 €
TRMDHPLH					HPL with MDF	white, black	5.308 € *
TRMTROH	TRIPLE TABLE WIDTH 90 HEIGHT 88	(x2) 200x107x9 (0.19) 139x107x9 (0.12) (x4) 93x29x78 (0.21) (x2) 130x7x9 (0.02)	155.4	stained (oak): matt oak, cognac, ash and wenge lacquered microtexturized (beech): white, black, grey, sand and smoke	stained	matt oak	4.082 €
						cognac, ash and wenge	4.274 €
TRMTTXH					lacquered (microtexturized)	white, black and grey	4.174 €
						sand, smoke grey	4.274 €
TRMTHPLH					HPL with MDF	white, black	6.961 € *
TRMSCROAH	SIMPLE TABLE 200 WIDTH 120 HEIGHT 88	220x139x9 (0.28) (x2) 93x29x78 (0.21) 130x7x9 (0.02)	94.2	stained (oak): matt oak, cognac, ash and wenge lacquered microtexturized (beech): white, black, grey, sand and smoke	stained	matt oak	2.354 €
						cognac, ash and wenge	2.476 €
TRMSCTXAH					lacquered (microtexturized)	white, black and grey	2.414 €
						sand, smoke grey	2.476 €
TRMSCHPLAH					HPL with MDF	white, black	3.755 € *
TRMSROAH	SIMPLE TABLE 240 WIDTH 120 HEIGHT 88	271x148x29 (1.16) (x2) 93x29x78 (0.21) 130x19x9 (0.02)	125.2	stained (oak): matt oak, cognac, ash and wenge lacquered microtexturized (beech): white, black, grey, sand and smoke	stained	matt oak	2.479 €
						cognac, ash and wenge	2.606 €
TRMSTXAH					lacquered (microtexturized)	white, black and grey	2.542 €
						sand, smoke grey	2.606 €
TRMSHPLAH					HPL with MDF	white, black	3.819 € *
TRMDROAH	DOUBLE TABLE WIDTH 120 HEIGHT 88	(x2) 200x139x9 (0.25) (x3) 93x29x78 (0.21) (x2) 130x19x9 (0.02	163.8	stained (oak): matt oak, cognac, ash and wenge lacquered microtexturized (beech): white, black, grey, sand and smoke	stained	matt oak	3.553 €
						cognac, ash and wenge	3.733 €
TRMDTXAH					lacquered (microtexturized)	white, black and grey	3.642 €
						sand, smoke grey	3.733 €
TRMDHPLAH					HPL with MDF	white, black	6.588 € *
TRMTROAH	TRIPLE TABLE WIDTH 120 HEIGHT 88	(x2) 200x139x9 (0.25) 139x139x9 (0.17) (x4) 93x29x78 (0.21) (x4) 9x18x122 (0.02)	218.6	stained (oak): matt oak, cognac, ash and wenge lacquered microtexturized (beech): white, black, grey, sand and smoke	stained	matt oak	4.861 €
						cognac, ash and wenge	5.114 €
TRMTTXAH					lacquered (microtexturized)	white, black and grey	4.986 €
						sand, smoke grey	5.113 €
TRMTHPLAH					HPL with MDF	white, black	8.634 € *

* The prices shown for MDF boards with HPL are calculated for orders less than 5 units. Please check prices for larger quantities.
Due to the fact that the wood used is natural, the finish may vary.

Trestle Table

BY JOHN PAWSON

COMPONENTS FOR COMPOSITIONS OF TABLES

For different compositions to those suggested, is offered the possibility to create your own compositions.
For all of them will have to choose two end table tops, central table tops according to the length of the table, and the legs (the number of legs will be the result of the number of total table tops plus 1).

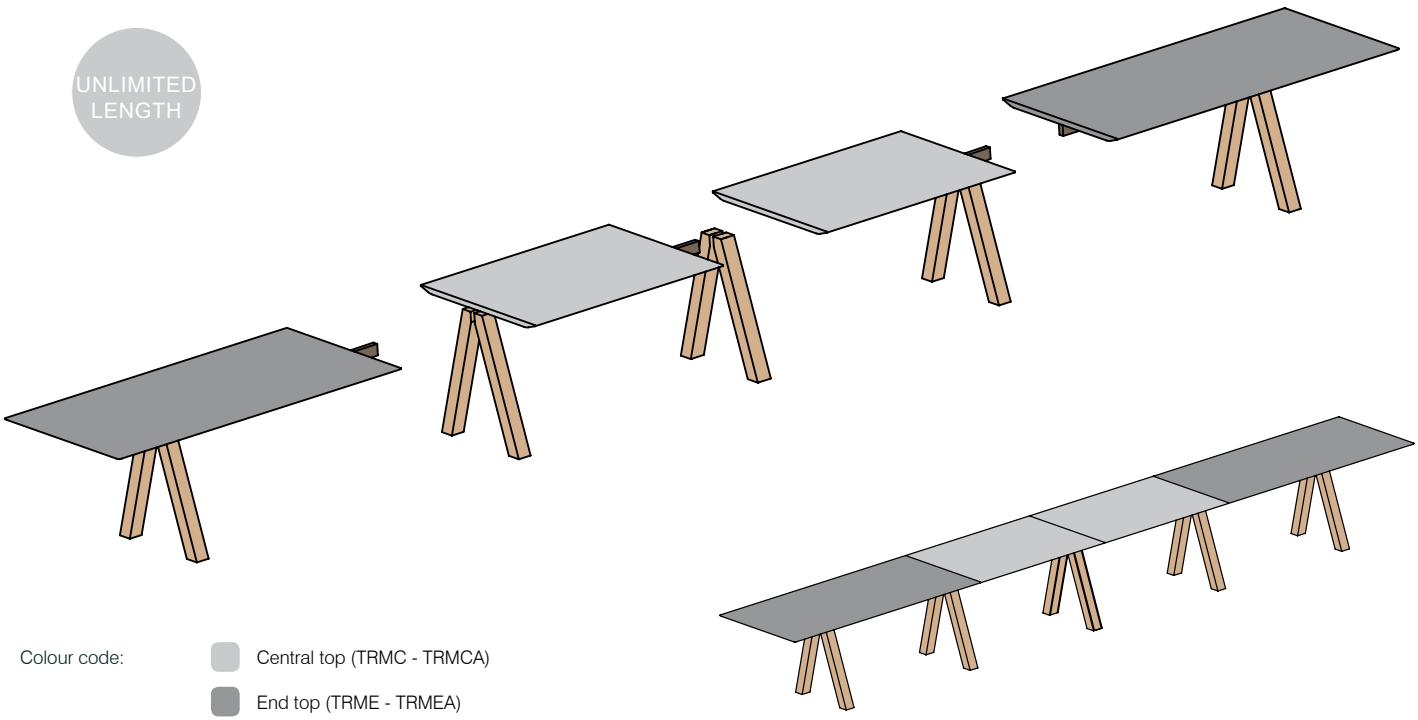

Colour code:

- Central top (TRMC - TRMCA)
- End top (TRME - TRMEA)
- Legs (TRPM - TRPMH)

TRMC - CENTRAL TABLE TOP WIDTH 90
TRMCA - CENTRAL TABLE TOP WIDTH 120

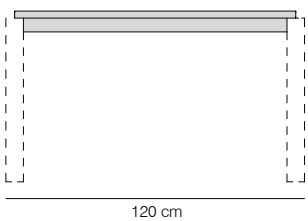

TRME - END TABLE TOP WIDTH 90
TRMEA - END TABLE TOP WIDTH 120

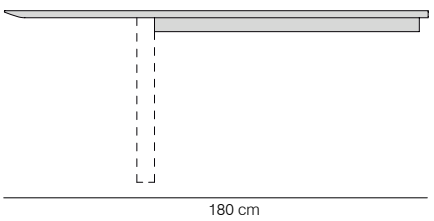

TRPM - LEGS HEIGHT 74

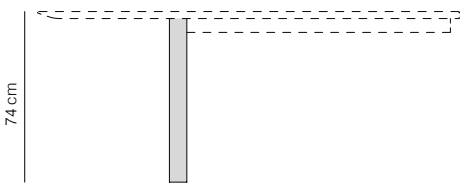

TRPMH - LEGS HEIGHT 88

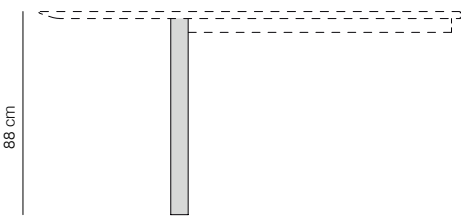

Trestle Table

BY JOHN PAWSON

CODE	MODEL	PACKAGING	WEIGHT (kg)	FINISHES		PUBLIC PRICE
TRMERO	END TABLE TOP L180 WIDTH 90	200x107x9 (0.19) 130x7x9 (0.02) x2	40	stained	matt oak	677 €
					cognac, ash and wenge	745 €
TREMETX				lacquered (microtexturized)	white, black and grey	709 €
					sand, smoke grey	745 €
TREMEHPL				HPL with MDF	white, black	1.835 € *
TRMCRO	CENTRAL TABLE TOP L120 WIDTH 90	139x107x9 (0.12) 9x18x122 (0.02) x2	33	stained	matt oak	545 €
					cognac, ash and wenge	600 €
TREMCTX				lacquered (microtexturized)	white, black and grey	571 €
					sand, smoke grey	600 €
TREMCHPL				HPL with MDF	white, black	1.108 € *
TRMEARO	END TABLE TOP L180 WIDTH 120	200x138x9 (0.25) 130x7x9 (0.02) x2	66	stained	matt oak	958 €
					cognac, ash and wenge	1.048 €
TREMEATX				lacquered (microtexturized)	white, black and grey	1.002 €
					sand, smoke grey	1.048 €
TREMEAHPL				HPL with MDF	white, black	2.475 € *
TRMCARO	CENTRAL TABLE TOP L120 WIDTH 120	139x139x9 (0.17) 130x7x9 (0.02) x2	40.2	stained	matt oak	762 €
					cognac, ash and wenge	835 €
TREMCATX				lacquered (microtexturized)	white, black and grey	798 €
					sand, smoke grey	834 €
TREMCAHPL				HPL with MDF	white, black	1.500 € *

* The prices shown for MDF boards with HPL are calculated for orders less than 5 units. Please check prices for larger quantities.
Due to the fact that the wood used is natural, the finish may vary.

CODE	MODEL	PACKAGING	WEIGHT (kg)	FINISHES		PUBLIC PRICE
TRPM	TABLE LEGS HEIGHT 74	69x29x78 (0.15) x1	9.3	stained (oak)	matt oak, cognac, ash and wenge	474 €
				lacquered (beech)	white, black, grey, sand and smoke	
TRPMH	TABLE LEGS HEIGHT 88	93x29x78 (0.21) x1	10.6	stained (oak)	matt oak, cognac, ash and wenge	546 €
				lacquered (beech)	white, black, grey, sand and smoke	

NB: Due to the fact that the wood used is natural, the finish may vary.

Trestle Table

BY JOHN PAWSON

ACCESSORIES

For the different table tops, we offer the possibility of installing the following accessories. The drawings with the location of the accessories need the approval of the Technical department.

AC03B - WHIRE HOLE

Cut out of the board is included.

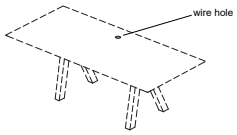

TRMEC - CUT OUT

Table top with incision to measure. The price is indicated per table top.

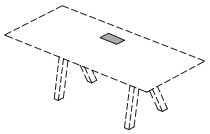

TRPROT - TABLE TOP PROTECTOR IN ECO LEATHER

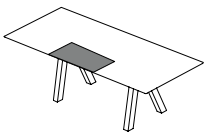

LECAN - WIRE HOLDER

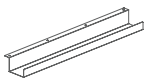

LEWIRES - SIMPLE WIRE COLUMN

LEWIRED - DOUBLE WIRE COLUMN

CARB - STORAGE UNIT 2 DRAWERS + FILLING CABINET (METALLIC PEDESTAL) WITH CASTERS

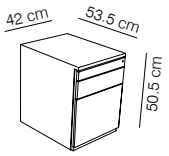

For folders, larger than DIN-4, some accessories are required. Not included.

CAJB - STORAGE UNIT 4 DRAWERS (METALLIC PEDESTAL) WITH CASTERS

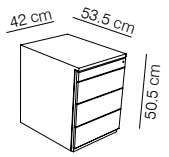

CODE	MODEL	PACKAGING	LENGTH/WIDTH	WEIGHT (kg)	FINISHES	PUBLIC PRICE
AC03B	WHIRE HOLE	Installed and included in the table top	ø6	-	black, white	15 €
TRMEC	CUT OUT	-	-	-	-	100 €
TRPROT	TABLE TOP PROTECTOR IN ECO LEATHER	Installed and included in the table top box	44X90	1	eco leather	205 €
LECAN	WIRE HOLDER	17x16x104 (0.01) x1	99X16X9	3	black, white	66 €
LEWIRES	SIMPLE WIRE COLUMN	74x15x28 (0.03) x1	25X12X71	3	black, white	139 €
LEWIRED	DOUBLE WIRE COLUMN					264 €
CARB	STORAGE UNIT 2 DRAWER + FILLING CABINET (METALLIC PEDESTAL) WITH CASTERS	52X64X56 (0.19) x1	53.5x42x50.5	34	white	426 €
CAJB	STORAGE UNIT 4 DRAWERS (METALLIC PEDESTAL) WITH CASTERS	52X64X56 (0.19) x1	53.5x42x50.5	34	white	426 €

Trestle Table

BY JOHN PAWSON

ACCESSORIES

For the different table tops, we offer the possibility of installing the following accessories. The drawings with the location of the accessories need the approval of the Technical department.

CAP - RECTANGULAR CONDUIT

Metallic access cover to the lower part of the table.
Available in white, black or grey.
Does not include electrifications.

CAPP - RECTANGULAR CONDUIT PLUS

Metal access cover to the lower part of the table, for wooden table tops. Metal frame available in black or grey and central part in the veneer of the finish of the table. Does not include electrifications.

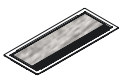

BOX - POWER BOX FOR TABLETOP

Metal cover with 4 plugs or combined with integrated multimedia elements.
Available in white, black or grey.

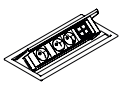

BOXP - POWER BOX PLUS FOR TABLETOP

Metal cover with 4 plugs or combined with integrated multimedia elements, for wooden table tops. Metal frame available in black or grey and central part in the veneer of the finish of the table.

CODE	MODEL	PACKAGING	LENGTH/WIDTH	WEIGHT (kg)	FINISHES	PUBLIC PRICE
CAP	RECTANGULAR CONDUIT*	34x18x9 (0.005)	32X15	1.2	black, white, grey	113 €
CAPP	RECTANGULAR CONDUIT PLUS*	34x18x9 (0.005)	32X15	1.2	black, white, grey	142 €
BOX-E	POWER BOX FOR TABLETOPS* (4 plugs)	34x18x9 (0.005)	32X15	1.7	black, white, grey	230 €
BOX-M	POWER BOX FOR TABLETOPS* (4 elements: plugs and multimedia elements)					330 €
BOXP-E	POWER BOX FOR TABLETOPS PLUS* (4 plugs)	34x18x9 (0.005)	32X15	1.7	black, grey	330 €
BOXP-M	POWER BOX FOR TABLETOPS PLUS* (4 elements: plugs and multimedia elements)					430 €

Each cover has 4 modules (plugs or multimedia elements) to accommodate electrification. The modules can be complete (1) or half modules (1/2).
The elictrification elements meets with the standards UNE-EN 50085.

Types of sockets:

Schuko	French	Italian 10A	Danish	American	British	Switzerland	Euroamerican
1	1	1	1	1	1	1	1

For more options, consult with the commercial department.

Types of multimedia elements:

VGA	RJ45	USB (data trasnfer)	USB (charge)	HDMI	Minijack
1	1	1/2	1/2	1/2	1/2

The elements with electrifications are completely wired internally, with current input by hose with quick tip connector.

* Cut out not included.

Trestle Table

BY JOHN PAWSON

SUGGESTIONS

HOME

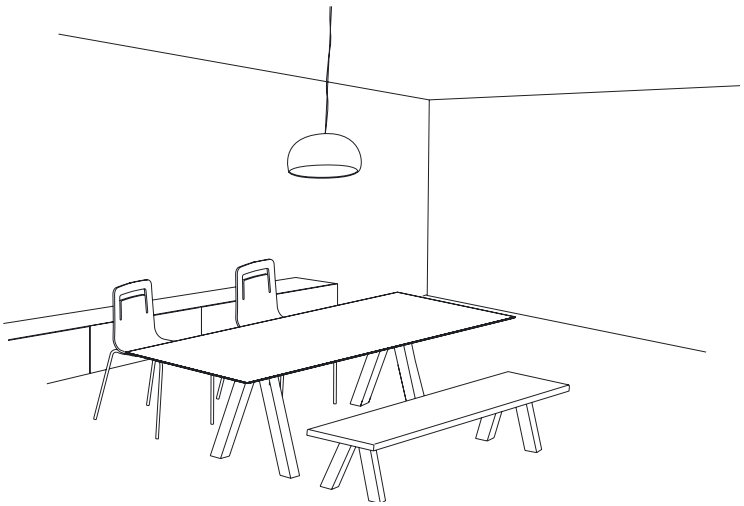

OFFICE

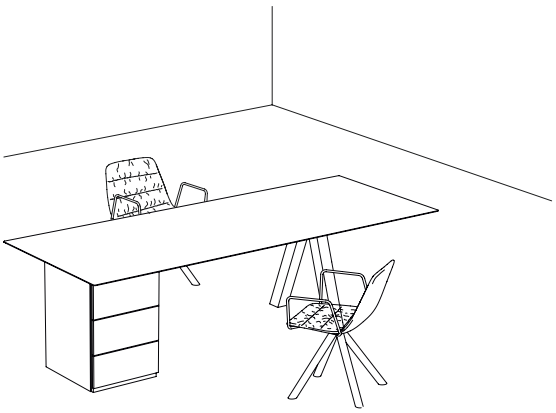

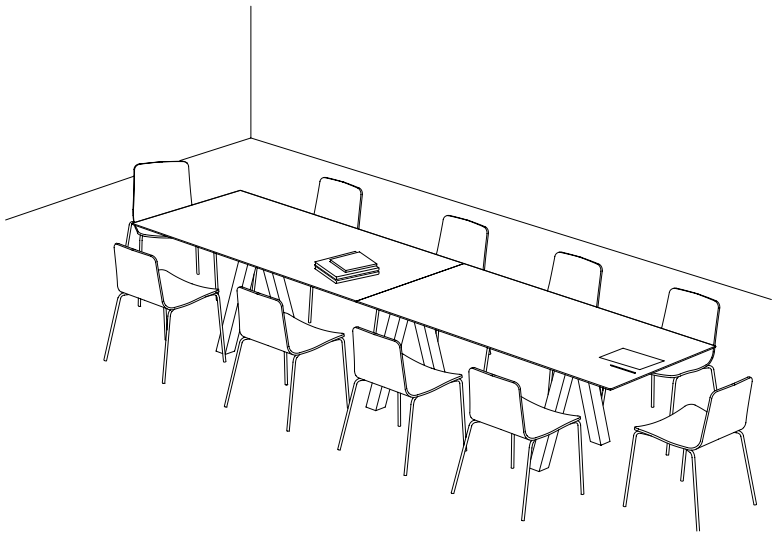

RESTAURANT

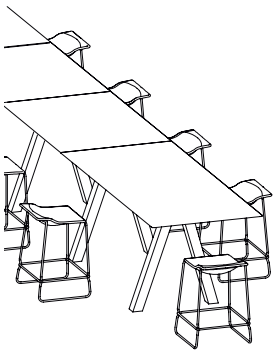

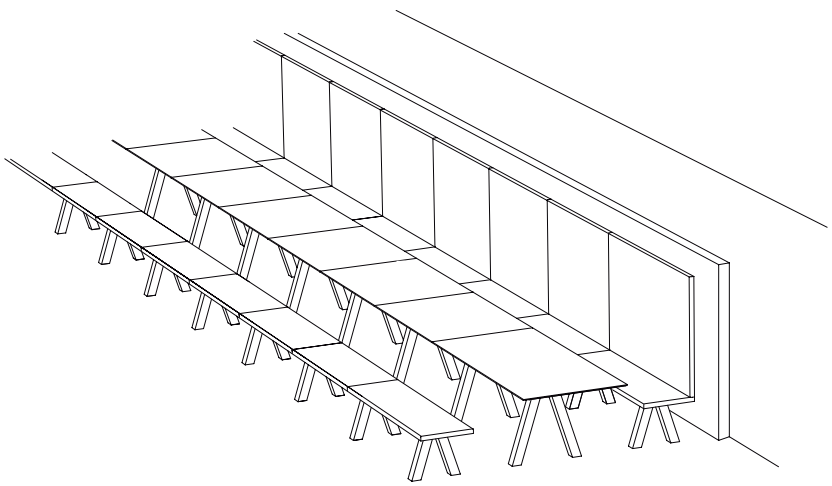

Maarten Table

BY VICTOR CARRASCO

Maarten Table

BY VICTOR CARRASCO

Maarten is a collection of tables and complements that allows many compositions and finishes.

The 30 mm thick cover or work surface is made with microtextured MDF. It is lacquered with one of our collection's finishes, making it very scratch resistant. It also comes with a solid oak veneer, stained in mate, wenge, cognac or ash. Available in high resistance materials such as HPL with MDF for heavy contract use.

Thickness and type of table top edge:

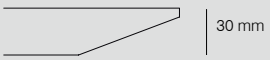

The legs, which come in heights of 30 or 74 cm, are made from calibrated steel, powder coated in thermoreinforced polyester. Available in white, black, fluorescent orange, altea blue or a stained oak veneer with the finishes of our collection.

The Maarten collection meets with the standards UNE EN 527-1:11, UNE EN 527-2-3:03 and ANSI/BIFMA X5.5:2014 (table height 74).

Important: please indicate with a drawing, the situation of each table, especially when combined with the support container or added accessories, along with the order to avoid confusion. Always remember that the right or left denomination always means facing the element. The more information you attach to the order, the less chance of error.

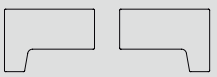

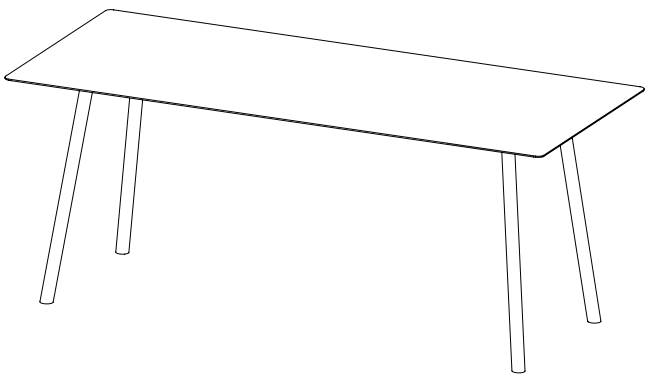

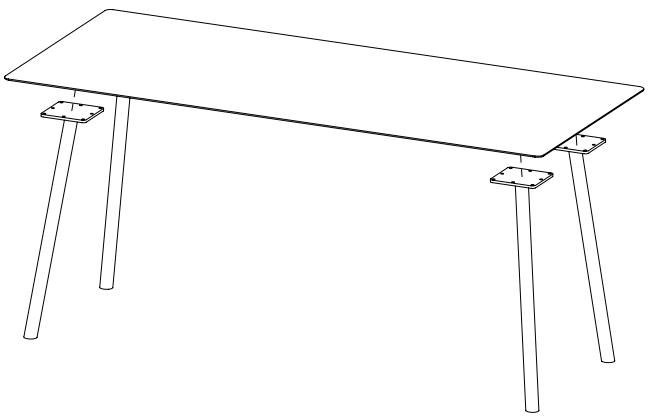

Different measures available for the height of the table:

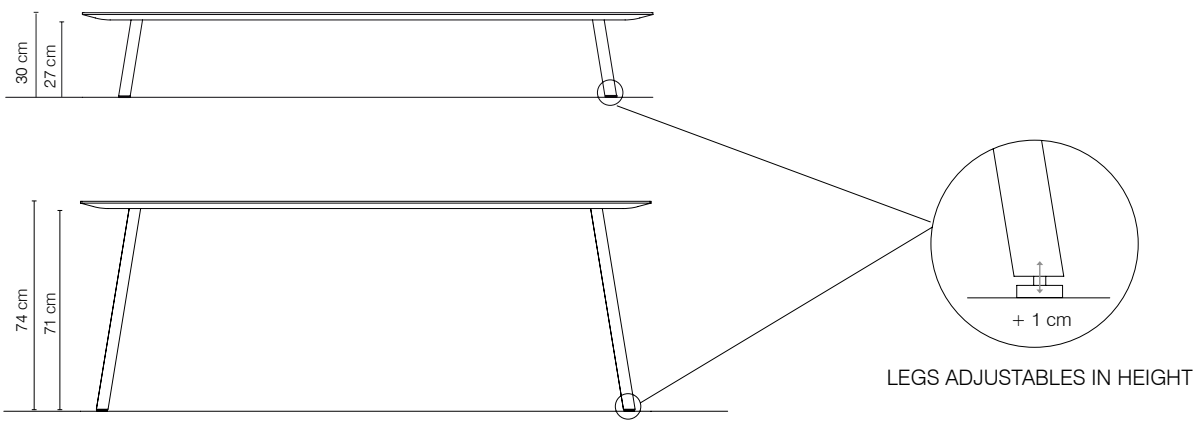

LEGS ADJUSTABLES IN HEIGHT

Maarten Table

BY VICTOR CARRASCO

HEIGHT 30

MAAB80 - 80X80 TABLE HEIGHT 30

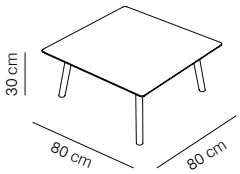

MAAB160 - 160x80 TABLE HEIGHT 30

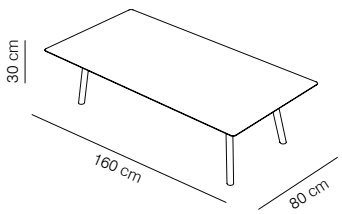

MAAB160_90 - 160x90 TABLE HEIGHT 30

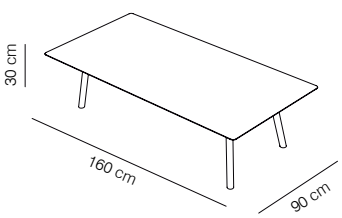

CODE	MODEL	PACKAGING	WEIGHT (kg)	FINISHES			PUBLIC PRICE
				LEGS	TABLE TOP		
MAAB80RO	80x80 TABLE H30	96x96x7 (0.06) (x4) 16x16x36 (0.01) x5	28.1	white, black, sand, altea blue, orange fluorescent or combined	stained	matt oak	517 €
						cognac, ash and wenge	556 €
MAAB80TX					lacquered	white, black and grey	535 €
						sand, tobacco, smoke grey and silver	554 €
						red, mustard, green, blue and bronze	580 €
MAAB80HPL					HPL with MDF	white, black	923 € *
MAAB80ROM				matt oak, cognac, ash and wenge	stained	matt oak	698 €
						cognac, ash and wenge	806 €
MAAB80TXM					lacquered	white, black and grey	772 €
						sand, tobacco, smoke grey and silver	804 €
						red, mustard, green, blue and bronze	852 €
MAAB80HPLM					HPL with MDF	white, black	1.200 € *
MAAB160RO	160x80 TABLE H30	180x94x8 (0.14) (x4) 16x16x36 (0.01) x5	40.8	white, black, sand, altea blue, orange fluorescent or combined	stained	matt oak	608 €
						cognac, ash and wenge	658 €
MAAB160TX					lacquered	white, black and grey	625 €
						sand, tobacco, smoke grey and silver	658 €
						red, mustard, green, blue and bronze	694 €
MAAB160HPL					HPL with MDF	white, black	1.203 € *
MAAB160ROM				matt oak, cognac, ash and wenge	stained	matt oak	821 €
						cognac, ash and wenge	954 €
MAAB160TXM					lacquered	white, black and grey	916 €
						sand, tobacco, smoke grey and silver	954 €
						red, mustard, green, blue and bronze	1.011 €
MAAB160HPLM					HPL with MDF	white, black	1.564 € *
MAAB160RO90	160x90 TABLE H30	179x109x7 (0.14) (x4) 16x16x36 (0.01) x5	46.3	white, black, sand, altea blue, orange fluorescent or combined	stained	matt oak	682 €
						cognac, ash and wenge	737 €
MAAB160TX90					lacquered	white, black and grey	700 €
						sand, tobacco, smoke grey and silver	737 €
						red, mustard, green, blue and bronze	778 €
MAAB160HPL90					HPL with MDF	white, black	1.339 € *
MAAB160RO90M				matt oak, cognac, ash and wenge	stained	matt oak	920 €
						cognac, ash and wenge	1.068 €
MAAB160TX90M					lacquered	white, black and grey	1.025 €
						sand, tobacco, smoke grey and silver	1.068 €
						red, mustard, green, blue and bronze	1.132 €
MAAB160HPL90M					HPL with MDF	white, black	1.740 € *

* The prices shown for MDF boards with HPL are calculated for orders less than 5 units. Please check prices for larger quantities.
Due to the fact that the wood used is natural, the finish may vary.

Maarten Table

BY VICTOR CARRASCO

HEIGHT 30

MAAB180 - 180x80 TABLE HEIGHT 30

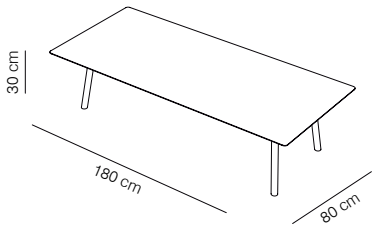

MAAB180_90 - 180x90 TABLE HEIGHT 30

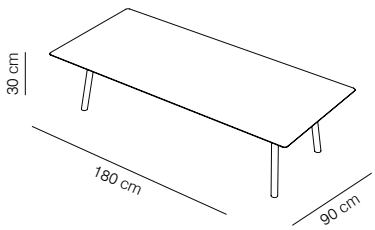

MAAB200 - 200x80 TABLE HEIGHT 30

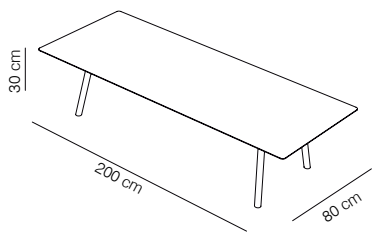

CODE	MODEL	PACKAGING	WEIGHT (kg)	FINISHES			PUBLIC PRICE
				LEGS	TABLE TOP		
MAAB180RO	180x80 TABLE H30	200x94x8 (0.15) (x4) 16x16x36 (0.01) x5	44.2	white, black, sand, altea blue, orange fluorescent or combined	stained	matt oak	653 €
						cognac, ash and wenge	713 €
MAAB180TX					lacquered	white, black and grey	674 €
						sand, tobacco, smoke grey and silver	713 €
						red, mustard, green, blue and bronze	751 €
MAAB180HPL					HPL with MDF	white, black	1.360 € *
MAAB180ROM				matt oak, cognac, ash and wenge	stained	matt oak	881 €
						cognac, ash and wenge	1.034 €
MAAB180TXM					lacquered	white, black and grey	992 €
						sand, tobacco, smoke grey and silver	1.033 €
						red, mustard, green, blue and bronze	1.095 €
MAAB180HPLM					HPL with MDF	white, black	1.767 € *
MAAB180RO90	180x90 TABLE H30	201x110x7 (0.15) (x4) 16x16x36 (0.01) x5	48.8	white, black, sand, altea blue, orange fluorescent or combined	stained	matt oak	731 €
						cognac, ash and wenge	798 €
MAAB180TX90					lacquered	white, black and grey	755 €
						sand, tobacco, smoke grey and silver	798 €
						red, mustard, green, blue and bronze	841 €
MAAB180HPL90					HPL with MDF	white, black	1.406 € *
MAAB180RO90M				matt oak, cognac, ash and wenge	stained	matt oak	987 €
						cognac, ash and wenge	1.157 €
MAAB180TX90M					lacquered	white, black and grey	1.111 €
						sand, tobacco, smoke grey and silver	1.157 €
						red, mustard, green, blue and bronze	1.226 €
MAAB180HPL90M					HPL with MDF	white, black	1.828 € *
MAAB200RO	200x80 TABLE H30	220x94x8 (0.15) (x4) 16x16x36 (0.01) x5	47.4	white, black, sand, altea blue, orange fluorescent or combined	stained	matt oak	658 €
						cognac, ash and wenge	767 €
MAAB200TX					lacquered	white, black and grey	724 €
						sand, tobacco, smoke grey and silver	767 €
						red, mustard, green, blue and bronze	811 €
MAAB200HPL					HPL with MDF	white, black	1.525 € *
MAAB200ROM				matt oak, cognac, ash and wenge	stained	matt oak	888 €
						cognac, ash and wenge	1.112 €
MAAB200TXM					lacquered	white, black and grey	1.068 €
						sand, tobacco, smoke grey and silver	1.112 €
						red, mustard, green, blue and bronze	1.179 €
MAAB200HPLM					HPL with MDF	white, black	1.982 € *

* The prices shown for MDF boards with HPL are calculated for orders less than 5 units. Please check prices for larger quantities.
Due to the fact that the wood used is natural, the finish may vary.

Maarten Table

BY VICTOR CARRASCO

HEIGHT 30

MAAB200_90 - 200x90 TABLE HEIGHT 30

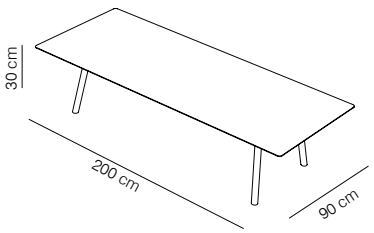

MAABD120 - D120 TABLE HEIGHT 30

The top is slightly oval-shaped (Page 143)

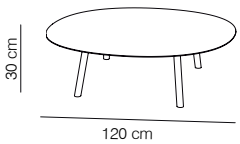

MAABD160 - D160 TABLE HEIGHT 30

The top is slightly oval-shaped (Page 143)

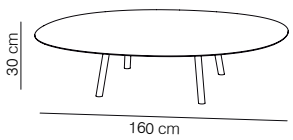

CODE	MODEL	PACKAGING	WEIGHT (kg)	FINISHES			PUBLIC PRICE
				LEGS	TABLE TOP		
MAAB200RO90	200x90 TABLE H30	219x107x9 (0.21) (x4) 16x16x36 (0.01) x5	54.1	white, black, sand, altea blue, orange fluorescent or combined	stained	matt oak	737 €
						cognac, ash and wenge	859 €
MAAB200TX90					lacquered	white, black and grey	810 €
						sand, tobacco, smoke grey and silver	859 €
						red, mustard, green, blue and bronze	908 €
MAAB200HPL90					HPL with MDF	white, black	1.604 € *
MAAB200RO90M				matt oak, cognac, ash and wenge	stained	matt oak	912 €
						cognac, ash and wenge	1.142 €
MAAB200TX90M					lacquered	white, black and grey	1.097 €
						sand, tobacco, smoke grey and silver	1.143 €
						red, mustard, green, blue and bronze	1.211 €
MAAB200HPL90M					HPL with MDF	white, black	2.085 € *
MAABD120RO	D120 TABLE H30	136x143x8 (0.16) (x4) 16x16x36 (0.01) x5	41.8	white, black, sand, altea blue, orange fluorescent or combined	stained	matt oak	719 €
						cognac, ash and wenge	780 €
MAABD120TX					lacquered	white, black and grey	737 €
						sand, tobacco, smoke grey and silver	780 €
						red, mustard, green, blue and bronze	824 €
MAABD120HPL					HPL with MDF	white, black	1.351 € *
MAABD120ROM				matt oak, cognac, ash and wenge	stained	matt oak	848 €
						cognac, ash and wenge	990 €
MAABD120TXM					lacquered	white, black and grey	950 €
						sand, tobacco, smoke grey and silver	990 €
						red, mustard, green, blue and bronze	1.050 €
MAABD120HPLM					HPL with MDF	white, black	1.756 € *
MAABD160RO	D160 TABLE H30	186x176x8 (0.26) (x4) 16x16x36 (0.01) x5	61.8	white, black, sand, altea blue, orange fluorescent or combined	stained	matt oak	953 €
						cognac, ash and wenge	1.037 €
MAABD160TX					lacquered	white, black and grey	980 €
						sand, tobacco, smoke grey and silver	1.037 €
						red, mustard, green, blue and bronze	1.092 €
MAABD160HPL					HPL with MDF	white, black	1.687 € *
MAABD160ROM				matt oak, cognac, ash and wenge	stained	matt oak	1.124 €
						cognac, ash and wenge	1.316 €
MAABD160TXM					lacquered	white, black and grey	1.264 €
						sand, tobacco, smoke grey and silver	1.316 €
						red, mustard, green, blue and bronze	1.396 €
MAABD160HPLM					HPL with MDF	white, black	2.193 € *

* The prices shown for MDF boards with HPL are calculated for orders less than 5 units. Please check prices for larger quantities.
Due to the fact that the wood used is natural, the finish may vary.

Maarten Table

BY VICTOR CARRASCO

HEIGHT 74

MAA80 - 80X80 TABLE HEIGHT 74

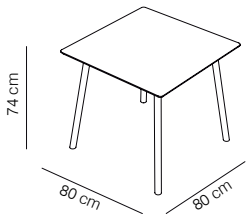

MAA160 - 160x80 TABLE HEIGHT 74

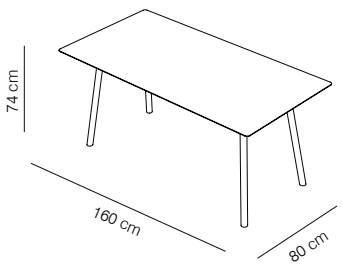

MAA160_90 - 160x90 TABLE HEIGHT 74

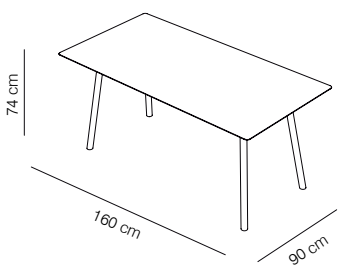

CODE	MODEL	PACKAGING	WEIGHT (kg)	FINISHES			PUBLIC PRICE
				LEGS	TABLE TOP		
MAA80RO	80x80 TABLE H74	96x96x7 (0.06) (x4) 16x16x80 (0.02) x5	28.1	white, black, sand, altea blue, orange fluorescent or combined	stained	matt oak	575 €
						cognac, ash and wenge	617 €
MAA80TX					lacquered	white, black and grey	595 €
						sand, tobacco, smoke grey and silver	617 €
						red, mustard, green, blue and bronze	644 €
MAA80HPL					HPL with MDF	white, black	1.025 € *
MAA80ROM				matt oak, cognac, ash and wenge	stained	matt oak	776 €
						cognac, ash and wenge	894 €
MAA80TXM					lacquered	white, black and grey	858 €
						sand, tobacco, smoke grey and silver	894 €
						red, mustard, green, blue and bronze	948 €
MAA80HPLM					HPL with MDF	white, black	1.333 € *
MAA160RO	160x80 TABLE H74	180x94x8 (0.14) (x4) 16x16x80 (0.02) x5	40.8	white, black, sand, altea blue, orange fluorescent or combined	stained	matt oak	676 €
						cognac, ash and wenge	731 €
MAA160TX					lacquered	white, black and grey	695 €
						sand, tobacco, smoke grey and silver	731 €
						red, mustard, green, blue and bronze	770 €
MAA160HPL					HPL with MDF	white, black	1.338 € *
MAA160ROM				matt oak, cognac, ash and wenge	stained	matt oak	912 €
						cognac, ash and wenge	1.060 €
MAA160TXM					lacquered	white, black and grey	1.017 €
						sand, tobacco, smoke grey and silver	1.060 €
						red, mustard, green, blue and bronze	1.123 €
MAA160HPLM					HPL with MDF	white, black	1.739 € *
MAA160RO90	160x90 TABLE H74	179x109x7 (0.14) (x4) 16x16x80 (0.02) x5	46.3	white, black, sand, altea blue, orange fluorescent or combined	stained	matt oak	757 €
						cognac, ash and wenge	818 €
MAA160TX90					lacquered	white, black and grey	778 €
						sand, tobacco, smoke grey and silver	818 €
						red, mustard, green, blue and bronze	864 €
MAA160HPL90					HPL with MDF	white, black	1.487 € *
MAA160RO90M				matt oak, cognac, ash and wenge	stained	matt oak	1.022 €
						cognac, ash and wenge	1.187 €
MAA160TX90M					lacquered	white, black and grey	1.139 €
						sand, tobacco, smoke grey and silver	1.187 €
						red, mustard, green, blue and bronze	1.258 €
MAA160HPL90M					HPL with MDF	white, black	1.933 € *

* The prices shown for MDF boards with HPL are calculated for orders less than 5 units. Please check prices for larger quantities.
Due to the fact that the wood used is natural, the finish may vary.

Maarten Table

BY VICTOR CARRASCO

HEIGHT 74

MAA180 - 180x80 TABLE HEIGHT 74

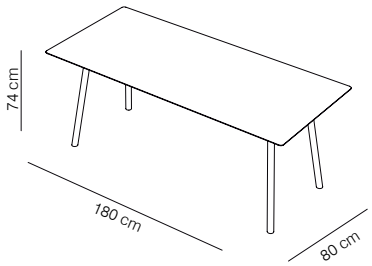

MAA180_90 - 180x90 TABLE HEIGHT 74

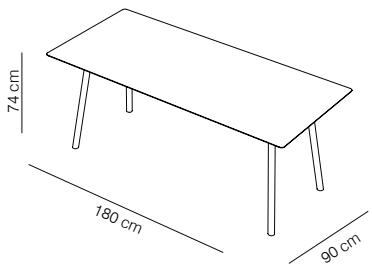

MAA200 - 200x80 TABLE HEIGHT 74

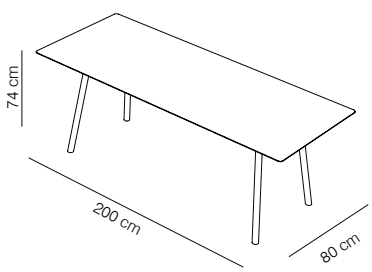

CODE	MODEL	PACKAGING	WEIGHT (kg)	FINISHES			PUBLIC PRICE
				LEGS	TABLE TOP		
MAA180RO	180x80 TABLE H74	200x94x8 (0.15) (x4) 16x16x80 (0.02) x5	44.2	white, black, sand, altea blue, orange fluorescent or combined	stained	matt oak	718 €
						cognac, ash and wenge	792 €
MAA180TX					lacquered	white, black and grey	749 €
						sand, tobacco, smoke grey and silver	792 €
						red, mustard, green, blue and bronze	834 €
MAA180HPL					HPL with MDF	white, black	1.510 € *
MAA180ROM				matt oak, cognac, ash and wenge	stained	matt oak	978 €
						cognac, ash and wenge	1.148 €
MAA180TXM					lacquered	white, black and grey	939 €
						sand, tobacco, smoke grey and silver	978 €
						red, mustard, green, blue and bronze	1.037 €
MAA180HPLM					HPL with MDF	white, black	1.963 € *
MAA180RO90	180x90 TABLE H74	201x110x7 (0.15) (x4) 16x16x80 (0.02) x5	48.8	white, black, sand, altea blue, orange fluorescent or combined	stained	matt oak	811 €
						cognac, ash and wenge	887 €
MAA180TX90					lacquered	white, black and grey	839 €
						sand, tobacco, smoke grey and silver	887 €
						red, mustard, green, blue and bronze	935 €
MAA180HPL90					HPL with MDF	white, black	1.562 € *
MAA180RO90M				matt oak, cognac, ash and wenge	stained	matt oak	1.095 €
						cognac, ash and wenge	1.286 €
MAA180TX90M					lacquered	white, black and grey	1.235 €
						sand, tobacco, smoke grey and silver	1.286 €
						red, mustard, green, blue and bronze	1.364 €
MAA180HPL90M					HPL with MDF	white, black	2.031 € *
MAA200RO	200x80 TABLE H74	220x94x8 (0.15) (x4) 16x16x80 (0.02) x5	47.4	white, black, sand, altea blue, orange fluorescent or combined	stained	matt oak	731 €
						cognac, ash and wenge	853 €
MAA200TX					lacquered	white, black and grey	804 €
						sand, tobacco, smoke grey and silver	853 €
						red, mustard, green, blue and bronze	901 €
MAA200HPL					HPL with MDF	white, black	1.694 € *
MAA200ROM			47.4	matt oak, cognac, ash and wenge	stained	matt oak	987 €
						cognac, ash and wenge	1.237 €
MAA200TXM					lacquered	white, black and grey	1.187 €
						sand, tobacco, smoke grey and silver	1.236 €
						red, mustard, green, blue and bronze	1.310 €
MAA200HPLM					HPL with MDF	white, black	2.202 € *

* The prices shown for MDF boards with HPL are calculated for orders less than 5 units. Please check prices for larger quantities.
Due to the fact that the wood used is natural, the finish may vary.

Maarten Table

BY VICTOR CARRASCO

HEIGHT 74

MAA200_90 - 200x90 TABLE HEIGHT 74

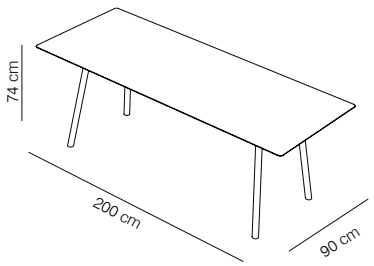

MAAD120 - D120 TABLE HEIGHT 74

The top is slightly oval-shaped (Page 143).

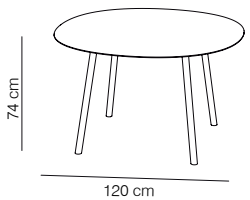

MAAD160 - D160 TABLE HEIGHT 74

The top is slightly oval-shaped (Page143).

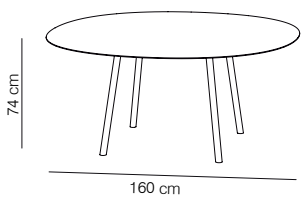

CODE	MODEL	PACKAGING	WEIGHT (kg)	FINISHES			PUBLIC PRICE
				LEGS	TABLE TOP		
MAA200RO90	200x90 TABLE H74	219x107x9 (0.21) (x4) 16x16x80 (0.02) x5	54.1	white, black, sand, altea blue, orange fluorescent or combined	stained	matt oak	818 €
						cognac, ash and wenge	955 €
MAA200TX90					lacquered	white, black and grey	900 €
						sand, tobacco, smoke grey and silver	955 €
						red, mustard, green, blue and bronze	1.009 €
MAA200HPL90					HPL with MDF	white, black	1.782 € *
MAA200RO90M				matt oak, cognac, ash and wenge	stained	matt oak	1.105 €
						cognac, ash and wenge	1.385 €
MAA200TX90M					lacquered	white, black and grey	1.329 €
						sand, tobacco, smoke grey and silver	1.385 €
						red, mustard, green, blue and bronze	1.468 €
MAA200HPL90M					HPL with MDF	white, black	2.317 € *
MAAD120RO	D120 TABLE H74	136x143x8 (0.16) (x4) 16x16x80 (0.02) x5	41.8	white, black, sand, altea blue, orange fluorescent or combined	stained	matt oak	798 €
						cognac, ash and wenge	866 €
MAAD120TX					lacquered	white, black and grey	818 €
						sand, tobacco, smoke grey and silver	868 €
						red, mustard, green, blue and bronze	916 €
MAAD120HPL					HPL with MDF	white, black	1.500 € *
MAAD120ROM				matt oak, cognac, ash and wenge	stained	matt oak	942 €
						cognac, ash and wenge	1.100 €
MAAD120TXM					lacquered	white, black and grey	1.056 €
						sand, tobacco, smoke grey and silver	1.100 €
						red, mustard, green, blue and bronze	1.166 €
MAAD120HPLM					HPL with MDF	white, black	1.951 € *
MAAD160RO	D160 TABLE H74	186x176x8 (0.26) (x4) 16x16x84 (0.02) x5	61.8	white, black, sand, altea blue, orange fluorescent or combined	stained	matt oak	1.058 €
						cognac, ash and wenge	1.151 €
MAAD160TX					lacquered	white, black and grey	1.090 €
						sand, tobacco, smoke grey and silver	1.151 €
						red, mustard, green, blue and bronze	1.213 €
MAAD160HPL					HPL with MDF	white, black	1.874 € *
MAAD160ROM				matt oak, cognac, ash and wenge	stained	matt oak	1.249 €
						cognac, ash and wenge	1.462 €
MAAD160TXM					lacquered	white, black and grey	1.404 €
						sand, tobacco, smoke grey and silver	1.463 €
						red, mustard, green, blue and bronze	1.551 €
MAAD160HPLM					HPL with MDF	white, black	2.437 € *

* The prices shown for MDF boards with HPL are calculated for orders less than 5 units. Please check prices for larger quantities.
Due to the fact that the wood used is natural, the finish may vary.

Maarten Table

BY VICTOR CARRASCO

HEIGHT 74

MAAA180 - 180x80 RETURN TABLE
HEIGHT 74

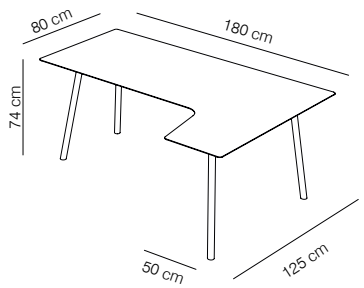

CODE	MODEL	PACKAGING	WEIGHT (kg)	FINISHES			PUBLIC PRICE
				LEGS	TABLE TOP		
MAAA180RO	180x80 RETURN TABLE H74	8x145x200 (0.22) (x4) 16x16x84 (0.02) x5	38.8	white, black, sand, altea blue, orange fluorescent or combined	stained	matt oak	938 €
						cognac, ash and wenge	1.031 €
MAAA180TX					lacquered	white, black and grey	968 €
						sand, tobacco, smoke grey and silver	1.031 €
						red, mustard, green, blue and bronze	1.092 €
MAAA180HPL					HPL with MDF	white, black	2.042 € *
MAAA180ROM				matt oak, cognac, ash and wenge	stained	matt oak	1.267 €
						cognac, ash and wenge	1.495 €
MAAA180TXM					lacquered	white, black and grey	1.434 €
						sand, tobacco, smoke grey and silver	1.494 €
						red, mustard, green, blue and bronze	1.584 €
MAAA180HPLM					HPL with MDF	white, black	2.654 € *

* The prices shown for MDF boards with HPL are calculated for orders less than 5 units. Please check prices for larger quantities.
Due to the fact that the wood used is natural, the finish may vary.

LEANED

MAA160A - 160x80 LEANED TABLE
HEIGHT 74

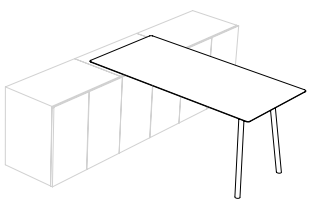

CODE	MODEL	PACKAGING	WEIGHT (kg)	FINISHES			PUBLIC PRICE
				LEGS	TABLE TOP		
MAA160ARO	160x80 LEANED TABLE H74	8x100x180 (0.08) (x2) 16x16x84 (0.02) x3	29	white, black, sand, altea blue, orange fluorescent or combined	stained	matt oak	538 €
						cognac, ash and wenge	592 €
MAA160ATX					lacquered	white, black and grey	556 €
						sand, tobacco, smoke grey and silver	592 €
						red, mustard, green, blue and bronze	629 €
MAA160AHPL					HPL with MDF	white, black	1.069 € *
MAA160AROM				matt oak, cognac, ash and wenge	stained	matt oak	725 €
						cognac, ash and wenge	858 €
MAA160ATXM					lacquered	white, black and grey	814 €
						sand, tobacco, smoke grey and silver	858 €
						red, mustard, green, blue and bronze	916 €
MAA160AHPLM					HPL with MDF	white, black	1.390 € *

MAA180A - 180x80 LEANED TABLE
HEIGHT 74

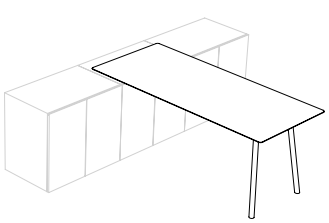

MAA180ARO	180x80 LEANED TABLE H74	8x100x200 (0.16) (x2) 16x16x84 (0.02) x3	31.9	white, black, sand, altea blue, orange fluorescent or combined	stained	matt oak	578 €
						cognac, ash and wenge	642 €
MAA180ATX					lacquered	white, black and grey	599 €
						sand, tobacco, smoke grey and silver	642 €
						red, mustard, green, blue and bronze	684 €
MAA180AHPL					HPL with MDF	white, black	1.208 € *

Maarten Table

BY VICTOR CARRASCO

LEANED

MAA180A - 180x80 LEANED TABLE
HEIGHT 74

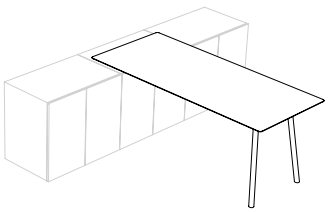

MAA200A - 200x80 LEANED TABLE
HEIGHT 74

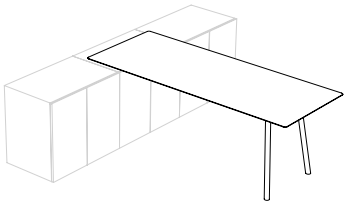

MAAA180A - 180x80 RETURN LEANED
TABLE HEIGHT 74

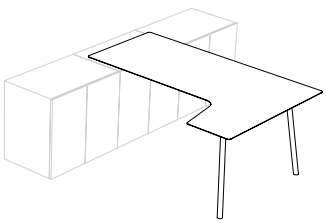

CODE	MODEL	PACKAGING	WEIGHT (kg)	FINISHES			PUBLIC PRICE
				LEGS	TABLE TOP		
MAA180AROM	TABLE 180x80 LEANED H74	8x100x200 (0.16) (x2) 16x16x84 (0.02) x3	31.9	matt oak, cognac, ash and wenge	stained	matt oak	781 €
						cognac, ash and wenge	931 €
MAA180ATXM					lacquered	white, black and grey	751 €
						sand, tobacco, smoke grey and silver	793 €
						red, mustard, green, blue and bronze	851 €
MAA180AHPLM					HPL with MDF	white, black	1.570 € *
MAA200ARO	200x80 LEANED TABLE H74	8x100x220 (0.18) (x2) 16x16x84 (0.02) x3	34.7	white, black, sand, altea blue, orange fluorescent or combined	stained	matt oak	619 €
						cognac, ash and wenge	692 €
MAA200AATX					lacquered	white, black and grey	643 €
						sand, tobacco, smoke grey and silver	692 €
						red, mustard, green, blue and bronze	740 €
MAA200AHPL					HPL with MDF	white, black	1.356 € *
MAA200AROM				matt oak, cognac, ash and wenge	stained	matt oak	835 €
						cognac, ash and wenge	1.004 €
MAA200ATXM					lacquered	white, black and grey	949 €
						sand, tobacco, smoke grey and silver	1.003 €
						red, mustard, green, blue and bronze	1.076 €
MAA200AHPLM					HPL with MDF	white, black	1.763 € *
MAAA180ARO	180x80 RETURN LEANED TABLE H74	8x145x200 (0.22) (x2) 16x16x84 (0.02) x3	32.4	white, black, sand, altea blue, orange fluorescent or combined	stained	matt oak	793 €
						cognac, ash and wenge	854 €
MAAA180ATX					lacquered	white, black and grey	823 €
						sand, tobacco, smoke grey and silver	854 €
						red, mustard, green, blue and bronze	884 €
MAAA180AHPL					HPL with MDF	white, black	1.736 € *
MAAA180AROM				matt oak, cognac, ash and wenge	stained	matt oak	1.070 €
						cognac, ash and wenge	1.238 €
MAAA180ATXM					lacquered	white, black and grey	1.219 €
						sand, tobacco, smoke grey and silver	1.238 €
						red, mustard, green, blue and bronze	1.282 €
MAAA180AHPLM					HPL with MDF	white, black	2.256 € *

* The prices shown for MDF boards with HPL are calculated for orders less than 5 units. Please check prices for larger quantities.
Due to the fact that the wood used is natural, the finish may vary.

Maarten Table

BY VICTOR CARRASCO

MAARTEN STORAGE UNITS

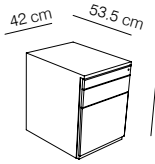

For folders, larger than DIN-4, some accessories are required.
Not included.

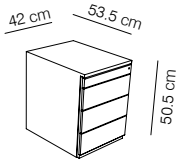

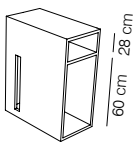

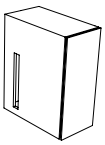

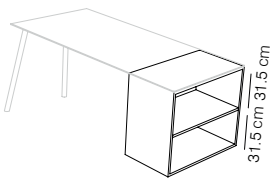

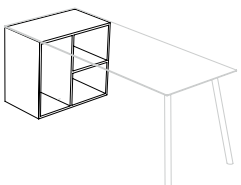

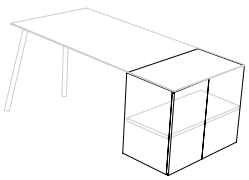

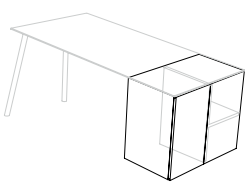

CODE	MODEL	PACKAGING	LENGTH/WIDTH/HEIGHT	WEIGHT (kg)	FINISHES	PUBLIC PRICE
CARB	STORAGE UNIT 2 DRAWERS + FILLING CABINET (METALLIC PEDESTAL) WITH CASTERS	52X64X56 (0.19) x1	53.5x42x50.5	34	white	426 €
CAJB	STORAGE UNIT 4 DRAWERS (METALLIC PEDESTAL) WITH CASTERS	52X64X56 (0.19) x1	53.5x42x50.5	34	white	426 €
DOCPU	STORAGE UNIT FOR CPU	39x66x76 (0.18) x1	30X55X68.5	18	white, black and grey	452 €
					sand, tobacco, smoke grey, and silver	485 €
					red, mustard, green and blue	506 €
DOCPUP	STORAGE UNIT FOR CPU + DOOR	39x66x76 (0.18) x1	30X57X68.5	20	white, black and grey	528 €
					sand, tobacco, smoke grey, and silver	564 €
					red, mustard, green and blue	592 €
DO800B	BUC 800 + SHELF	60x75x87 (0.38) x1	80X52X69	30	white, black and grey	521 €
					sand, tobacco, smoke grey, and silver	557 €
					red, mustard, green and blue	583 €
DO800DB	STORAGE UNIT 800 + DIVIDERS N.B. In case you want to use this storage unit for the CPU, check and take into account that deep is 45cm.	60x75x87 (0.38) x1	80X52X69	34	white, black and grey	560 €
					sand, tobacco, smoke grey, and silver	600 €
					red, mustard, green and blue	629 €
DO800PB	STORAGE UNIT 800 + DOORS (shelf included)	60x75x87 (0.38) x1	80X54X69	35	white, black and grey	661 €
					sand, tobacco, smoke grey, and silver	774 €
					red, mustard, green and blue	820 €
DO800DPB	STORAGE UNIT 800 + DOORS (shelf + dividers included) N.B. In case you want to use this storage unit for the CPU, check and take into account that deep is 45cm.	60x75x87 (0.38) x1	80X54X69	38	white, black and grey	685 €
					sand, tobacco, smoke grey, and silver	802 €
					red, mustard, green and blue	850 €

Maarten Table

BY VICTOR CARRASCO

ACCESSORIES

For the different table tops, we offer the possibility of installing the following accessories. The drawings with the location of the accessories need the approval of the Technical department.

AC03B - WHIRE HOLE

Cut out of the board is included.

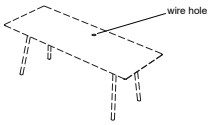

MAARMEC - CUT OUT

Table top with incision to measure. The price is indicated per table top.

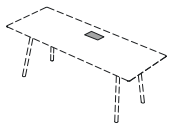

PROT - TABLE TOP PROTECTOR IN ECO LEATHER

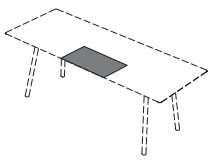

LECAN - WIRE HOLDER

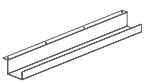

LEWIRES - SIMPLE WIRE COLUMN

LEWIRED - DOUBLE WIRE COLUMN

MAAF160 - MODESTY SCREEN 160

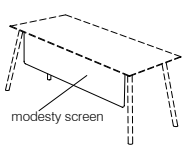

MAAF180 - MODESTY SCREEN 180
MAAF200 - MODESTY SCREEN 200

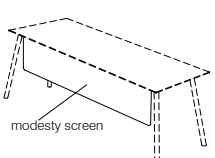

CODE	MODEL	PACKAGING	LENGTH/WIDTH	WEIGHT (kg)	FINISHES	PUBLIC PRICE
AC03B	WHIRE HOLE	Installed and included in the table top	Ø6	-	black, white	15 €
MAARMEC	CUT OUT	-	-	-	-	100 €
PROT	TABLE TOP PROTECTOR IN ECO LEATHER	Installed and included in the table top box	44X90	1	eco piel	205 €
LECAN	WIRE HOLDER	17x16x104 (0.01) x1	99X16X9	3	black, white	66 €
LEWIRES	SIMPLE WIRE COLUMN	74x15x28 (0.03) x1	25X12X71	3	black, white	139 €
LEWIRED	DOUBLE WIRE COLUMN					264 €
MAAF160RO	MODESTY SCREEN 160	134x53x9 (0.06) x1	1140X330	-	matt oak, cognac, ash and wenge	154 €
MAAF160TX					white, black and grey	163 €
					sand, tobacco, smoke grey, and silver	170 €
					red, mustard, green and blue	181 €
MAAF180RO MAAF200RO	MODESTY SCREEN 180 Y 200	154x53x9 (0.07) x1	1340X330	-	matt oak, cognac, ash and wenge	154 €
MAAF180TX MAAF200TX					white, black and grey	163 €
					sand, tobacco, smoke grey, and silver	170 €
					red, mustard, green and blue	181 €

Maarten Table

BY VICTOR CARRASCO

ACCESSORIES

For the different table tops, we offer the possibility of installing the following accessories. The drawings with the location of the accessories need the approval of the Technical department.

CAP - RECTANGULAR CONDUIT

Metallic access placket to the lower part of the table.
Available in white, black or grey.
Does not include electrifications.

CAPP - RECTANGULAR CONDUIT PLUS

Metal access placket to the lower part of the table, for wooden table tops. Metal frame available in black or grey and central part in the veneer of the finish of the table. Does not include electrifications.

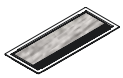

BOX - POWER BOX FOR TABLETOP

Metal placket with 4 plugs or combined with integrated multimedia elements.
Available in white, black or grey.

BOXP - POWER BOX PLUS FOR TABLETOP

Metal placket with 4 plugs or combined with integrated multimedia elements, for wooden table tops. Metal frame available in black or grey and central part in the veneer of the finish of the table.

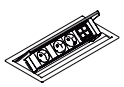

CODE	MODEL	PACKAGING	LENGTH/WIDTH	WEIGHT (kg)	FINISHES	PUBLIC PRICE
CAP	RECTANGULAR CONDUIT*	34x18x9 (0.005)	32X15	1.2	black, white, grey	113 €
CAPP	RECTANGULAR CONDUIT PLUS*	34x18x9 (0.005)	32X15	1.2	black, white, grey	142 €
BOX-E	POWER BOX FOR TABLETOPS* (4 plugs)	34x18x9 (0.005)	32X15	1.7	black, white, grey	230 €
BOX-M	POWER BOX FOR TABLETOPS* (4 elements: plugs and multimedia elements)					330 €
BOXP-E	POWER BOX FOR TABLETOPS PLUS* (4 plugs)	34x18x9 (0.005)	32X15	1.7	black, grey	330 €
BOXP-M	POWER BOX FOR TABLETOPS PLUS* (4 elements: plugs and multimedia elements)					430 €

Each placket has 4 modules (plugs or multimedia elements) to accommodate electrification. The modules can be complete (1) or half modules (1/2).
The elictrification elements meets with the standards UNE-EN 50085.

Types of sockets:

Schuko	French	Italian 10A	Danish	American	British	Switzerland	Euroamerican
1	1	1	1	1	1	1	1

For more options, consult with the commercial department.

Types of multimedia elements:

VGA	RJ45	USB (data trasnfer)	USB (charge)	HDMI	Minijack
1	1	1/2	1/2	1/2	1/2

The elements with electrifications are completely wired internally, with current input by hose with quick tip connector.

* Cut out not included.

Maarten Table

BY VICTOR CARRASCO

OFFICE SUGGESTIONS

The prices of the compositions shown below are valued for table tops and storage units lacquered in white and lacquered legs.

COMPOSITION 1

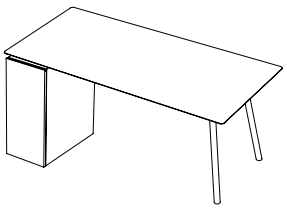

COMPOSITION 2

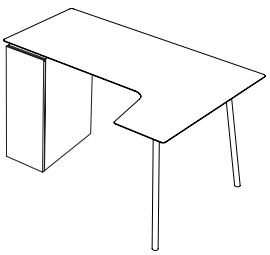

COMPOSITION 3

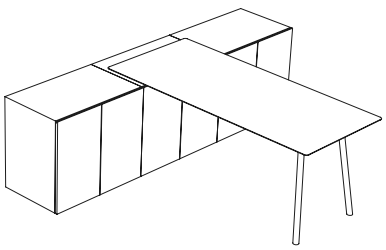

COMPOSITION 4

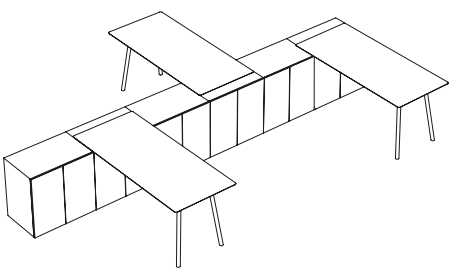

COMPOSITION 5

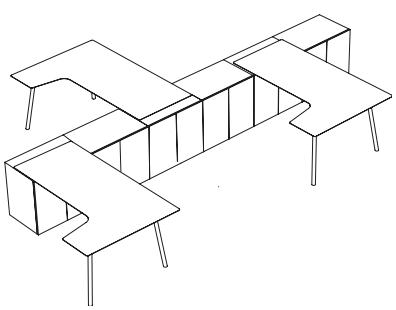

MODEL	COMPONENTS	LENGHT/WIDTH/HEIGHT	VOL. (m3)	WEIGHT (kg)	PUBLIC PRICE
COMPOSITION 1	TABLE 180X80 LANDED OVER STORAGE UNIT FOR CPU WITH DOOR	180X80X74	1.06	52	1.127 €
COMPOSITION 2	TABLE 180X80 RETURN TABLE LANDED OVER STORAGE UNIT FOR CPU WITH DOOR	180X125X74	1.7	52.4	1.351 €
COMPOSITION 3	TABLE 180X80 LANDED OVER 3 STORAGE UNIT 800 WITH DOOR (shelf included)	207X240X74	3.7	170	2.582 €
COMPOSITION 4	3 TABLES 180X80 LANDED OVER 6 STORAGE UNIT 800 WITH DOOR (shelf included)	360X480X74	12.8	306	5.764 €
COMPOSITION 5	3 TABLE 180X80 RETURN TABLES LANDED OVER 6 STORAGE UNIT 800 WITH DOOR (shelf included)	360X480X74	12.8	307.2	5.638 €

Maarten Table

BY VICTOR CARRASCO

SUGGESTIONS

HOME

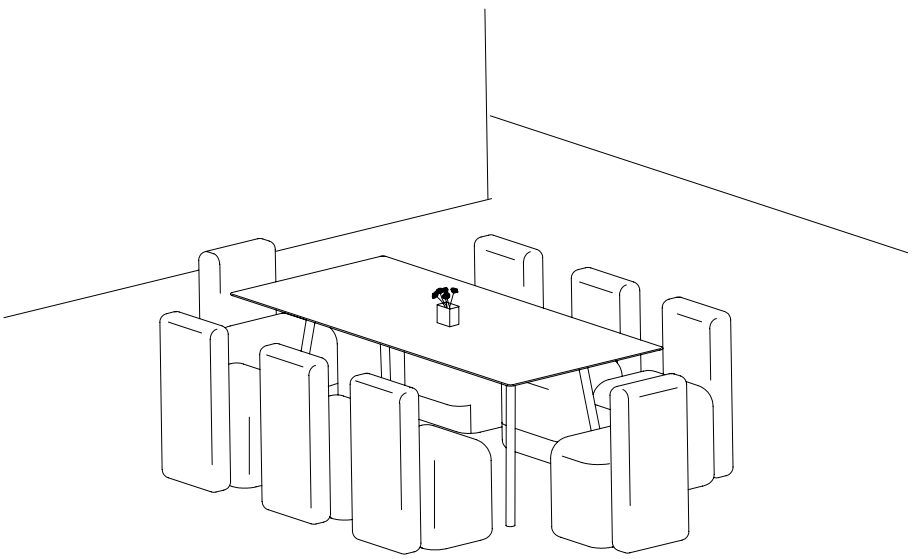

RESTAURANT

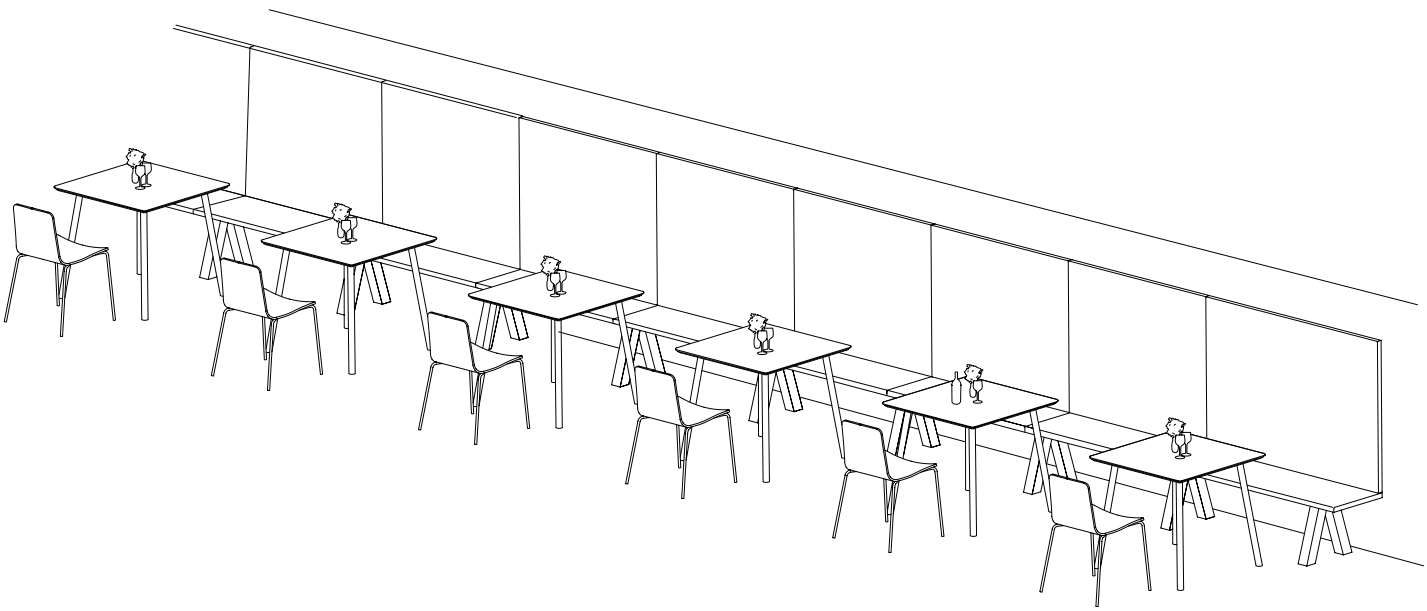

Maarten Table

BY VICTOR CARRASCO

SEATS RECOMMENDED BY TABLE

80x80 table (up to 4 chairs)

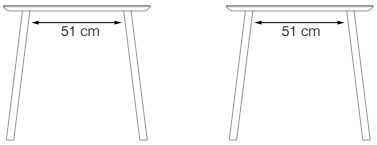

160x80 | 160X90 table (up to 6 chairs)

180x80 | 180X90 table (up to 8 chairs)

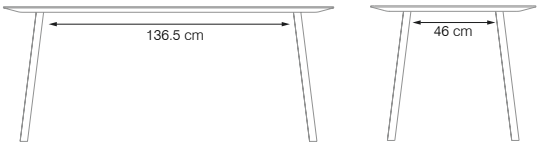

200x80 | 200X90 table (up to 8 chairs)

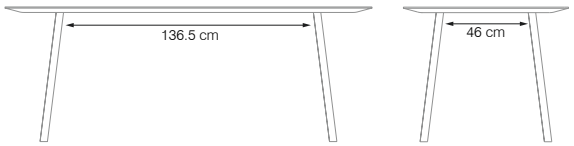

180x80 return table

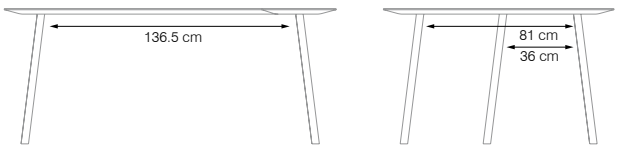

Table diameter 120 (up to 6 chairs)

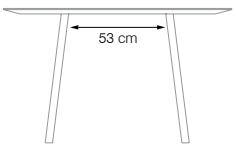

Table diameter 160 (up to 8 chairs)

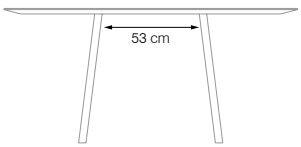

NB: The table top that is '120 in diameter' and '160 in diameter' are slightly oval-shaped.

Table diameter 120

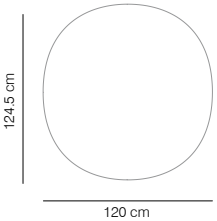

Table diameter 160

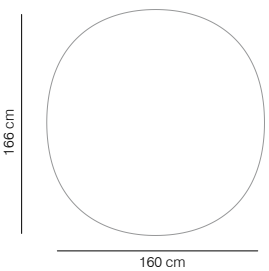

Serra

BY VICTOR CARRASCO

Serra

BY VICTOR CARRASCO

Lacquered MDF or oak verneer tops in the finishes of our collection.
Column in calibrated powder coated steel tube in thermoreinforced polyester in white, black, mustard or altea blue.
Strap or belt produced in high-resistance technical fabric in red, black and grey.
There is a possibility of combining boards of different colours. In that case, you always have to consider the price of the superior category.

Test Certificates: UNE EN 15372:08* (Serra 45) and ANSI/SOHO S6.5:2008*.
* See the list of tests on page 282.

SE45S - HEIGHT 45 WITHOUT STRAP

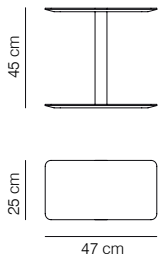

SE45 - HEIGHT 45 WITH STRAP

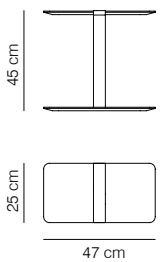

SE50 - HEIGHT 50 WITHOUT STRAP

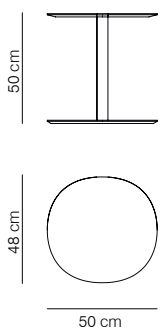

CODE	MODEL	PACKAGING	WEIGHT (kg)	FINISHES				PUBLIC PRICE
				STRAP	STRUCTURE	TOPS		
SE45S	SERRA 45 RECTANGULAR WITHOUT STRAP	53x52x33 (0.09) x1	5.5	-	white, black	stained	matt oak	238 €
							cognac, ash and wenge	260 €
						lacquered	white, black and grey	247 €
							sand, tobacco, smoke grey and silver	260 €
							red, mustard, green, blue and bronze	274 €
					mustard, altea blue	stained	matt oak	288 €
							cognac, ash and wenge	312 €
						lacquered	white, black and grey	298 €
							sand, tobacco, smoke grey and silver	312 €
							red, mustard, green, blue and bronze	328 €
SE45	SERRA 45 RECTANGULAR WITH STRAP	53x52x33 (0.09) x1	5.5	black, grey and red	white, black	stained	matt oak	253 €
							cognac, ash and wenge	274 €
						lacquered	white, black and grey	260 €
							sand, tobacco, smoke grey and silver	274 €
							red, mustard, green, blue and bronze	299 €
					mustard, altea blue	stained	matt oak	304 €
							cognac, ash and wenge	328 €
						lacquered	white, black and grey	312 €
							sand, tobacco, smoke grey and silver	328 €
							red, mustard, green, blue and bronze	344 €
SE50	SERRA 50 ROUND WITHOUT STRAP	55x54x58 (0.17) x1	11.4	-	white, black	stained	matt oak	307 €
							cognac, ash and wenge	344 €
						lacquered	white, black and grey	328 €
							sand, tobacco, smoke grey and silver	344 €
							red, mustard, green, blue and bronze	361 €
					mustard, altea blue	stained	matt oak	366 €
							cognac, ash and wenge	396 €
						lacquered	white, black and grey	377 €
							sand, tobacco, smoke grey and silver	396 €
							red, mustard, green, blue and bronze	418 €

OPTIONS FOR FINISHES:

- STRAP: black, grey and red.
- COLUMN: black, white, altea blue and moustard.
- TOP: - STAINED: matt oak, cognac, ash and wenge.
  - LACQUERED (microtexturized): black.
  - LACQUERED (smooth and satin):
    COLORS 1: white and grey.
    COLORS 2: sand, tobacco, smoke grey and silver.
    COLORS 3: red, mustard, green, blue and bronze.

Tiers

BY PATRICIA URQUIOLA

Tiers

BY PATRICIA URQUIOLA

Structure in calibrated powder coated steel tube in thermoreinforced polyester in white or black.
Top in MDF lacquered in the finishes of our collection or veneered in matt natural oak, cognac, ash or wenge.
Transparent injection polypropylene glides.
In origin the piece has the same colour everywhere. In case of bicolor option, you must consider the superior price category.

T1AB - COMPOSITION A

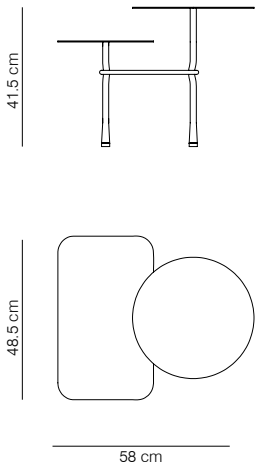

CODE	MODEL	PACKAGING	WEIGHT (kg)	FINISHES			PUBLIC PRICE
				STRUCTURE	TOPS		
T1ABRO	COMPOSITION A	66x57x48 (0.18) x1	7.2	white, black	stained	matt oak	449 €
						cognac, ash and wenge	468 €
T1AB					lacquered	white, black and grey	449 €
						sand, tobacco, smoke grey and silver	468 €
						red, mustard, green, blue and bronze	485 €

OPTIONS FOR FINISHES:

- BASE: white and black.
- TOP: - STAINED: matt oak, cognac, ash and wenge.
  - LACQUERED (microtexturized): black.
  - LACQUERED (smooth and satin):
    COLORS 1: white and grey.
    COLORS 2: sand, tobacco, smoke grey and silver.
    COLORS 3: red, mustard, green, blue and bronze.

NB 1: If one of the black lacquered tops is ordered, the other top will also come with a microtexturized finish.
NB 2: Due to the fact that the wood used is natural, the finish may vary.

T1BB - COMPOSITION B

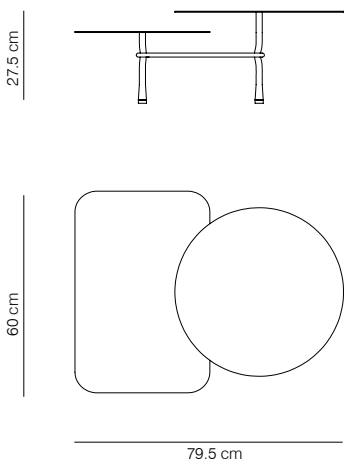

CODE	MODEL	PACKAGING	WEIGHT (kg)	FINISHES			PUBLIC PRICE
				STRUCTURE	TOPS		
T1BBRO	COMPOSITION B	93x74x38 (0.26) x1	10.9	white, black	stained	matt oak	577 €
						cognac, ash and wenge	601 €
T1BB					lacquered	white, black and grey	577 €
						sand, tobacco, smoke grey and silver	601 €
						red, mustard, green, blue and bronze	624 €

OPTIONS FOR FINISHES:

- BASE: white and black.
- TOP: - STAINED: matt oak, cognac, ash and wenge.
  - LACQUERED (microtexturized): black.
  - LACQUERED (smooth and satin):
    COLORS 1: white and grey.
    COLORS 2: sand, tobacco, smoke grey and silver.
    COLORS 3: red, mustard, green, blue and bronze.

NB 1: If one of the black lacquered tops is ordered, the other top will also come with a microtexturized finish.
NB 2: Due to the fact that the wood used is natural, the finish may vary.

Holy Day

BY JEAN-MARIE MASSAUD

Holy Day

BY JEAN-MARIE MASSAUD

PRIZE

GOOD DESIGN

CHICAGO 2008

Coffee table with the options of oak wood or upholstered with the finishes of our collection.
Structure in calibrated powder coated steel tube in thermoreinforced polyester in white or black.

Needed fabric for material 1.40 m wide:
HD50: 0.75m

HD50 - TABLE D50

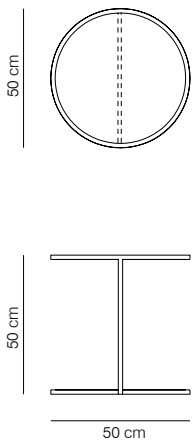

CODE	MODEL	PACKAGING	WEIGHT (kg)	FINISHES		PUBLIC PRICE (Fire Re. Foam)	PUBLIC PRICE
HD50RO	TABLE D50	52x52x52 (0.14) x1	5.8	stained	matt oak	-	431 €
					cognac, ash and wenge	-	464 €
HD50ROTX				lacquered (microtexturized)	white, black and grey	-	454 €
					sand, tobacco, smoke grey and silver	-	464 €
					red, mustard, green, blue and bronze	-	473 €
HD50-1				upholstered	COM / COL	508 €	493 €
HD50-2					G2	508 €	493 €
HD50-3					G3	576 €	559 €
HD50-4					G4	646 €	628 €
HD50-5					G5	706 €	685 €

OPTIONS FOR FINISHES:

- STAINED: matt oak, cognac, wenge and ash.
- LACQUERED (microtexturized):
  COLORS 1: white, black and grey.
  COLORS 2: sand, tobacco, smoke grey and silver.
  COLORS 3: red, moustard, green, blue and bronze.

NB: Due to the fact that the wood used is natural, the finish may vary.

Ryutaro

BY VICTOR CARRASCO

Ryutaro

BY VICTOR CARRASCO

Tops in MDF lacquered or oak verneer with the finishes of our collection. Due to the fact that the wood used is natural, the finish may vary.
Legs in calibrated powder coated steel tube in thermoreinforced polyester in black, white or red with transparent injection polypropylene glides.
Different base and legs sizes available.

ROUND 50

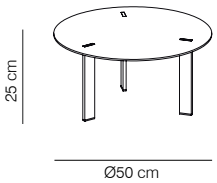

CODE	MODEL	PACKAGING	HEIGHT	WEIGHT (kg)	FINISHES			PUBLIC PRICE
					STRUCTURE	TABLE TOP		
RYD50H25	ROUND 50	65x66x7 (0.03) 42x33x11 (0.02) x2	H25	4.9	black, white	stained	matt oak	271 €
							cognac, ash and wenge	296 €
RYD50H25L						lacquered	white, black and grey	284 €
							sand, tobacco, smoke grey and silver	296 €
							red, mustard, green, blue and bronze	307 €

ROUND 60

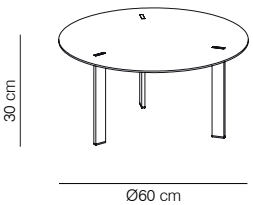

CODE	MODEL	PACKAGING	HEIGHT	WEIGHT (kg)	FINISHES			PUBLIC PRICE
					STRUCTURE	TABLE TOP		
RYD60H30	ROUND 60	76x76x7 (0.04) 42x43x11 (0.02) x2	H30	6.6	black, white and red	stained	matt oak	305 €
							cognac, ash and wenge	332 €
RYD60H30L						lacquered	white, black and grey	320 €
							sand, tobacco, smoke grey and silver	332 €
							red, mustard, green, blue and bronze	346 €

ROUND 90

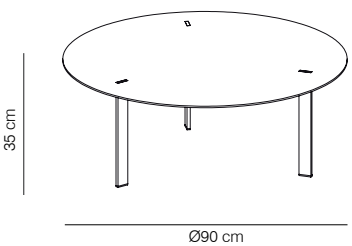

CODE	MODEL	PACKAGING	HEIGHT	WEIGHT (kg)	FINISHES			PUBLIC PRICE
					STRUCTURE	TABLE TOP		
RYD90H35	ROUND 90	106x106x7 (0.08) 42x43x11 (0.02) x2	H35	12.1	black, white	stained	matt oak	450 €
							cognac, ash and wenge	492 €
RYD90H35L						lacquered	white, black and grey	474 €
							sand, tobacco, smoke grey and silver	492 €
							red, mustard, green, blue and bronze	511 €

OPTIONS FOR FINISHES:

- LEGS: white and black lacquered. For 30 cm height leg available in red.
- TOP: - STAINED: matt oak, cognac, ash and wenge.
  - LACQUERED (microtexturized): black.
  - LACQUERED (satin): COLORS 1: white and grey.
    COLORS 2: sand, tobacco, smoke grey and silver.
    COLORS 2: red, mustard, green, blue and bronze.

NB: Due to the fact that the wood used is natural, the finish may vary.

Burin

BY PATRICIA URQUIOLA

Burin

BY PATRICIA URQUIOLA

Table in MDF with single-colour lacquer finish with the finishes of our collection.
Structure in calibrated powder coated steel tube in thermoreinforced polyester.
Polyurethane foam base with 10 kg interior counterweight.
Handle made of high resistance technical fabric, available for all tables.
Test Certificates: UNE EN 15372:08*
* See the list of tests on page 282.

BU50 - HEIGHT 50

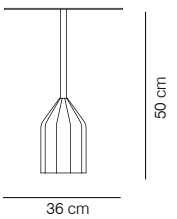

BU55 - HEIGHT 55

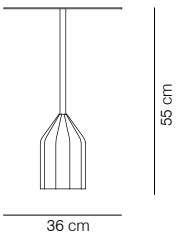

BU50A - HEIGHT 50 WITH HANDLE

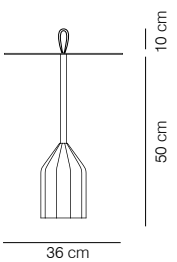

BU55A - HEIGHT 55 WITH HANDLE

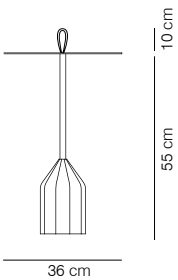

CODE	MODEL	PACKAGING	WEIGHT (kg)	FINISHES		PUBLIC PRICE
				LACQUERED	HANDLE	
BU50	HEIGHT 50	40x40x60 (0.10) X1	13.3	white, black and grey	-	449 €
				sand, tobacco, smoke grey and silver		469 €
BU55	HEIGHT 55		13.5	red, mustard, green, blue and bronze		488 €
BU50A	HEIGHT 50 WITH HANDLE		13.3	white, black and grey	white, black, blue, green, brown y red	485 €
				sand, tobacco, smoke grey and silver		505 €
BU55A	HEIGHT 55 WITH HANDLE		13.5	red, mustard, green, blue and bronze		524 €

OPTIONS FOR FINISHES:

- LACQUERED (microtexturized): black.
- LACQUERED (smooth and satin): COLORS 1: white and grey.
  COLORS 2: sand, tobacco, smoke grey and silver.
  COLORS 2: red, mustard, green, blue and bronze.
- TEXTILE HANDLE: white, black, blue, green, brown and red.

Shape

BY JORGE PENSI

Shape

BY JORGE PENSI

Collection of tables manufactured in MDF.
Lacquered manually in high gloss or satin in the colours of the collection.
Test certificates: UNE EN 15372:08

SH-H - MODEL H

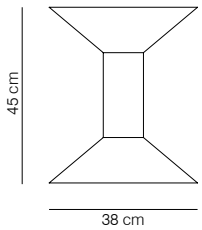

SH-O - MODEL O

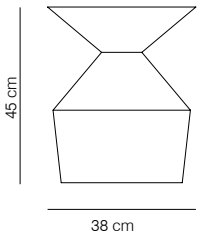

CODE	MODEL	PACKAGING	WEIGHT (kg)	FINISHES		PUBLIC PRICE
SH-H	MODEL H	47x46x54 (0.12) x1	12	Matt	white, black and grey	558 €
					sand, tobacco, smoke grey and silver	587 €
					red, mustard, green, blue and bronze	618 €
				High gloss	white, black, smoke grey and pistachio green	664 €
				Fluorescent	orange fluorescent	728 €
SH-O	MODEL O		15.8	Matt	white, black and grey	686 €
					sand, tobacco, smoke grey and silver	727 €
					red, mustard, green, blue and bronze	768 €
				High gloss	white, black, smoke grey and pistachio green	824 €
				Fluorescent	orange fluorescent	912 €

OPTIONS FOR FINISHES:

- MATT LACQUERED:
  COLORS 1: white, black and grey.
  COLORS 2: sand, tobacco, smoke grey and silver.
  COLORS 3: red, mustard, green and blue.
- HIGH GLOSS LACQUERED:
  COLORS: white, black, smoke grey and pistachio green.
- FLUORESCENT LACQUERED:
  COLORS: orange fluorescent.

Aspa

BY FR DESIGN

Aspa

BY FR DESIGN

Table top available in different measures, materials and thickness:

- "Sandwich" consisting in two parts, where the underneath part is always lacquered in the same colour that the base (white or black) and the top is in MDF lacquered or oak verneer finishes of our collection.

- Low Pressure Laminate (LPL) thickness 19 mm with 1,5 mm PVC edge, in white or black.

- 12 mm thick compact laminated table top. The edge can be in white or black. With a black edge, the surface of the tabletop can be white or black; for a white edge, it can be white.

- High Pressure Laminate (HPL) thickness 19 mm with 1,5 mm PVC edge, in white or black.

Base in calibrated powder coated steel tube in thermoreinforced polyester in black or white.

Different base sizes available. The prices are quoted including the appropriate table top for the correct stability.

Test Certificates: UNE EN 15372:08*, UNE EN 48268, UNE 56843:01, UNE EN 622-5:2007, UNE EN 622-1:2004, UNE EN 11022-1:92 and ANSI/SOHO S6.5 R2013.*

* See the list of tests on page 282.

Thickness and type of table top edges available for each material:

MDF

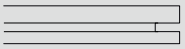

Low Pressure Laminate | HPL

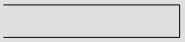

Compact

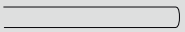

NB: The height of the table varies according to the thickness of the different table tops. The height indicated below refers to the MDF table.

HEIGHT 40

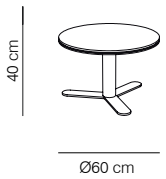

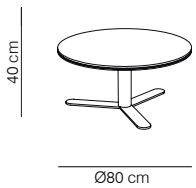

CODE	MODEL	PACKAGING	WEIGHT (kg)	FINISHES		PUBLIC PRICE
AS40D60M	ROUND 60	76x76x7 (0.04) 36x38x42 (0.06) 6x9x35 (0.002) x3	21.6	low pressure laminate	white, black	480 €
AS40D60				stained	matt oak	522 €
					cognac, ash and wenge stain	587 €
AS40D60TX				lacquered (microtexturized)	white, black and grey	561 €
					sand, tobacco, smoke grey and silver	587 €
					red, mustard, green and blue	611 €
AS40D60CN				compact laminate (black edge)	white, black	627 € *
AS40D60CB				compact laminate (white edge)	white	708 € *
AS40D60HPL				HPL	white, black	708 € *
AS40D80M	ROUND 80	96x96x7 (0.07) 36x38x42 (0.06) 6x9x42 (0.002) x3	27.2	low pressure laminate	white, black	564 €
AS40D80				stained	matt oak	627 €
					cognac, ash and wenge stain	691 €
AS40D80TX				lacquered (microtexturized)	white, black and grey	660 €
					sand, tobacco, smoke grey and silver	691 €
					red, mustard, green and blue	721 €
AS40D80CN				compact laminate (black edge)	white, black	737 € *
AS40D80CB				compact laminate (white edge)	white	833 € *
AS40D80HPL				HPL	white, black	833 € *

* The prices shown for HPL table tops and compact are calculated for orders less than 5 units. Please check prices for larger quantities.
Due to the fact that the wood used is natural, the finish may vary.

Aspa
BY FR DESIGN

HEIGHT 40

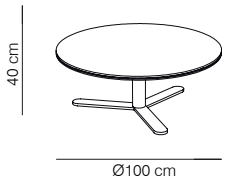

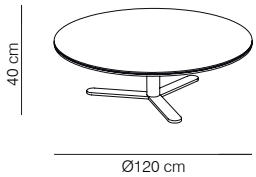

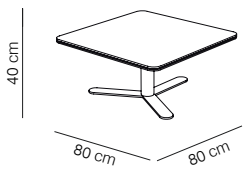

CODE	MODEL	PACKAGING	WEIGHT (kg)	FINISHES		PUBLIC PRICE
AS40D100M	ROUND 100	117x117x7 (0.10) 36x38x42 (0.06) 6x9x52 (0.004) x3	35.3	low pressure laminate	white, black	716 €
AS40D100				stained	matt oak	822 €
					cognac, ash and wenge stain	895 €
AS40D100TX				lacquered (microtexturized)	white, black and grey	856 €
					sand, tobacco, smoke grey and silver	895 €
					red, mustard, green and blue	932 €
AS40D100CN				compact laminate (black edge)	white, black	936 € *
AS40D100CB				compact laminate (white edge)	white	1.058 € *
AS40D100HPL				HPL	white, black	1.058 € *
AS40D120M	ROUND 120	137x137x7 (0.14) 36x38x42 (0.06) 6x9x62 (0.005) x3	40.6	low pressure laminate	white, black	803 €
AS40D120				stained	matt oak	897 €
					cognac, ash and wenge stain	1.001 €
AS40D120TX				lacquered (microtexturized)	white, black and grey	957 €
					sand, tobacco, smoke grey and silver	1.002 €
					red, mustard, green and blue	1.061 €
AS40D120CN				compact laminate (black edge)	white, black	1.049 € *
AS40D120CB				compact laminate (white edge)	white	1.186 € *
AS40D120HPL				HPL	white, black	1.186 € *
AS40C80M	SQUARE 80X80	7x87x87 (0.05) 35x35x40 (0.05) 6x9x41 (0.02) x3	41	low pressure laminate	white, black	562 €
AS40C80				stained	matt oak	621 €
					cognac, ash and wenge stain	690 €
AS40C80TX				lacquered (microtexturized)	white, black and grey	659 €
					sand, tobacco, smoke grey and silver	690 €
					red, mustard, green and blue	719 €
AS40C80CN				compact laminate (black edge)	white, black	735 € *
AS40C80CB				compact laminate (white edge)	white	831 € *
AS40C80HPL				HPL	white, black	831 € *

* The prices shown for HPL table tops and compact are calculated for orders less than 5 units. Please check prices for larger quantities.

OPTIONS FOR FINISHES:

- ESTRUCTURE: white or black.
- TOP - STAINED: matt oak, cognac, ash and wenge.
  - LACQUERED (microtexturized):
    COLORS 1: white, black and grey.
    COLORS 2: sand, tobacco, smoke grey and silver.
    COLORS 3: red, mustard, green and blue.
  - LOW PRESSURE LAMINATE: white or black.
  - COMPACT LAMINATE (black edge): white or black.
  - COMPACT LAMINATE (white edge): white.
  - HPL: white or black.

Due to the fact that the wood used is natural, the finish may vary.

Aspa

BY FR DESIGN

HEIGHT 74

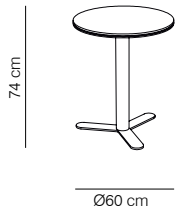

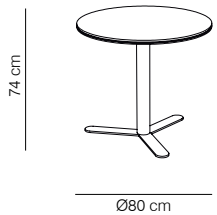

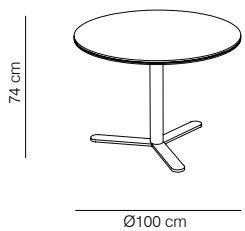

CODE	MODEL	PACKAGING	WEIGHT (kg)	FINISHES		PUBLIC PRICE
AS74D60M	ROUND 60	7x67x67 (0.03) 35x35x73 (0.09) 6x9x31 (0.002) x3	36	low pressure laminate	white, black	500 €
AS74D60				stained	matt oak	547 €
					cognac, ash and wenge stain	611 €
AS74D60TX				lacquered (microtexturized)	white, black and grey	585 €
					sand, tobacco, smoke grey and silver	611 €
					red, mustard, green and blue	637 €
AS74D60CN				compact laminate (black edge)	white, black	653 € *
AS74D60CB				compact laminate (white edge)	white	738 € *
AS74D60HPL				HPL	white, black	738 € *
AS74D80M	ROUND 80	7x87x87 (0.05) 35x35x73 (0.09) 6x9x41 (0.002) x3	41	low pressure laminate	white, black	587 €
AS74D80				stained	matt oak	644 €
					cognac, ash and wenge stain	715 €
AS74D80TX				lacquered (microtexturized)	white, black and grey	685 €
					sand, tobacco, smoke grey and silver	715 €
					red, mustard, green and blue	745 €
AS74D80CN				compact laminate (black edge)	white, black	766 € *
AS74D80CB				compact laminate (white edge)	white	866 € *
AS74D80HPL				HPL	white, black	866 € *
AS74D100M	ROUND 100	7x108x108 (0.08) 35x35x73 (0.09) 6x9x51 (0.003) x3	42	low pressure laminate	white, black	746 €
AS74D100				stained	matt oak	858 €
					cognac, ash and wenge stain	930 €
AS74D100TX				lacquered (microtexturized)	white, black and grey	891 €
					sand, tobacco, smoke grey and silver	930 €
					red, mustard, green and blue	971 €
AS74D100CN				compact laminate (black edge)	white, black	976 € *
AS74D100CB				compact laminate (white edge)	white	1.103 € *
AS74D100HPL				HPL	white, black	1.103 € *

* The prices shown for HPL table tops and compact are calculated for orders less than 5 units. Please check prices for larger quantities.

OPTIONS FOR FINISHES:

- ESTRUCTURE: white or black.
- TOP
  - STAINED: matt oak, cognac, ash and wenge.
  - LACQUERED (microtexturized):
    COLORS 1: white, black and grey.
    COLORS 2: sand, tobacco, smoke grey and silver.
    COLORS 3: red, mustard, green and blue.
  - LOW PRESSURE LAMINATE: white or black.
  - COMPACT LAMINATE (black edge): white or black.
  - COMPACT LAMINATE (white edge): white.
  - HPL: white or black.

Due to the fact that the wood used is natural, the finish may vary.

Aspa
BY FR DESIGN

HEIGHT 74

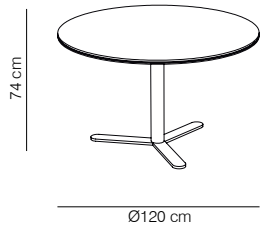

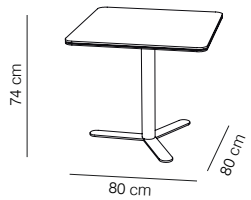

CODE	MODEL	PACKAGING	WEIGHT (kg)	FINISHES		PUBLIC PRICE
AS74D120M	ROUND 120	7x128x128 (0.15) 35x35x73 (0.09) 6x9x61 (0.003) x3	49	low pressure laminate	white, black	840 €
AS74D120				stained	matt oak	927 €
					cognac, ash and wenge stain	1.047 €
AS74D120TX				lacquered (microtexturized)	white, black and grey	1.002 €
					sand, tobacco, smoke grey and silver	1.047 €
					red, mustard, green and blue	1.089 €
AS74D120CN				compact laminate (black edge)	white, black	1.096 € *
AS74D120CB				compact laminate (white edge)	white	1.240 € *
AS74D120HPL				HPL	white, black	1.240 € *
AS74C80M	SQUARE 80X80	7x87x87 (0.05) 35x35x73 (0.09) 6x9x41 (0.002) x3	43	low pressure laminate	white, black	587 €
AS74C80				stained	matt oak	644 €
					cognac, ash and wenge stain	715 €
AS74C80TX				lacquered (microtexturized)	white, black and grey	685 €
					sand, tobacco, smoke grey and silver	715 €
					red, mustard, green and blue	745 €
AS74C80CN				compact laminate (black edge)	white, black	766 € *
AS74C80CB				compact laminate (white edge)	white	866 € *
AS74C80HPL				HPL	white, black	866 € *

* The prices shown for HPL table tops and compact are calculated for orders less than 5 units. Please check prices for larger quantities.
Due to the fact that the wood used is natural, the finish may vary.

ALTURA 110

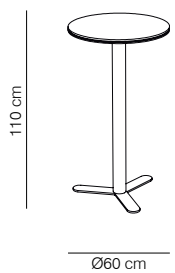

CODE	MODEL	PACKAGING	WEIGHT (kg)	FINISHES		PUBLIC PRICE
AS110D60M	ROUND 60	7x67x67 (0.03) 35x35x110 (0.14) 6x9x31 (0.002) x3	41	low pressure laminate	white, black	507 €
AS110D60				stained	matt oak	559 €
					cognac, ash and wenge stain	621 €
AS110D60TX				lacquered (microtexturized)	white, black and grey	593 €
					sand, tobacco, smoke grey and silver	620 €
					red, mustard, green and blue	646 €
AS110D60CN				compact laminate (black edge)	white, black	662 € *
AS110D60CB				compact laminate (white edge)	white	749 € *
AS110D60HPL				HPL	white, black	749 € *

* The prices shown for HPL table tops and compact are calculated for orders less than 5 units. Please check prices for larger quantities.
Due to the fact that the wood used is natural, the finish may vary.

Stan

BY STUDIO VCCB

Stan

BY STUDIO VCCB

Table top available in different measures, materials and thickness:

· Low Pressure Laminate (LPL) thickness 19 mm with 1,5 mm PVC edge, in white or black.

· 12 mm thick compact laminated table top. The edge can be in white or black. With a black edge, the surface of the tabletop can be white or black; for a white edge, it can be white.

· High Pressure Laminate (HPL) thickness 19 mm with 1,5 mm PVC edge, in white or black.

Base in powder coated steel in thermoreinforced polyester in white, silver (gloss) or black. The white base of the Stan table is in RAL 9016.

Different base sizes available.

The prices are quoted including the appropriate table top for the correct stability.

NB: The height of the table varies according to the thickness of the different table tops. The height indicated below refers to the Compact table.

Thickness and type of table top edges available for each material:

Low Pressure Laminate | HPL

19 mm

Compact

12 mm

HEIGHT 45

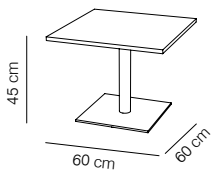

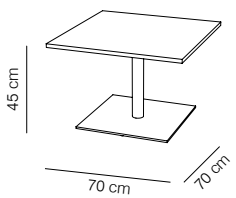

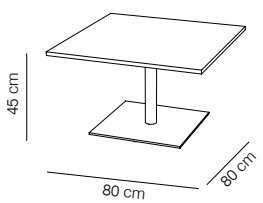

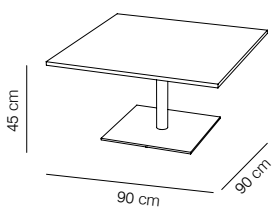

CODE	MODEL	PACKAGING	WEIGHT (kg)	FINISHES			PUBLIC PRICE
				BASE	TABLE TOP		
ST45C60M	60x60	95x83.5x12.5 (0.08) 50x42x50 (0.10) x2	26.2	white, black or silver	low pressure laminate	white, black	478 €
ST45C60CN					compact laminate (black edge)	white, black	516 € *
ST45C60HPL					HPL	white, black	770 € *
ST45C60CB					compact laminate (white edge)	white	770 € *
ST45C70M	70x70	91.5x93.5x12.5 (0.10) 60x52x50 (0.15) x2	28.7	white, black or silver	low pressure laminate	white, black	539 €
ST45C70CN					compact laminate (black edge)	white, black	604 € *
ST45C70HPL					HPL	white, black	923 € *
ST45C70CB					compact laminate (white edge)	white	923 € *
ST45C80M	80x80	101.5x103.5x12.5 (0.13) 60x52x50 (0.15) x2	30.3	white, black or silver	low pressure laminate	white, black	550 €
ST45C80CN					compact laminate (black edge)	white, black	658 € *
ST45C80HPL					HPL	white, black	931 € *
ST45C80CB					compact laminate (white edge)	white	931 € *
ST45C90M	90x90	111.5x113.5x12.5 (0.15) 60x52x50 (0.15) x2	31.7	white, black or silver	low pressure laminate	white, black	557 €
ST45C90CN					compact laminate (black edge)	white, black	732 € *
ST45C90HPL					HPL	white, black	1.128 € *
ST45C90CB					compact laminate (white edge)	white	1.128 € *

* The prices shown for HPL table tops and compact are calculated for orders less than 5 units. Please check prices for larger quantities.

Stan

BY STUDIO VCCB

HEIGHT 72

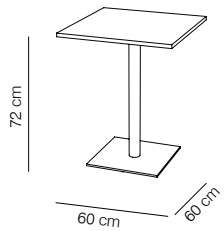

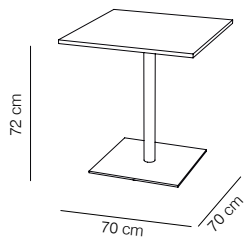

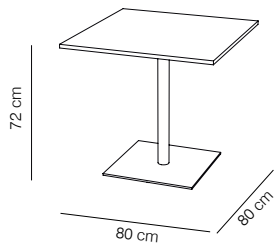

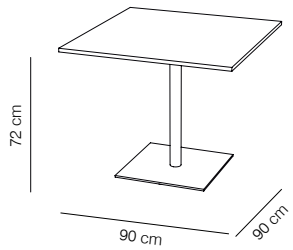

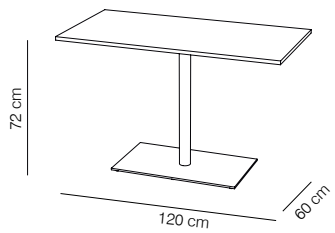

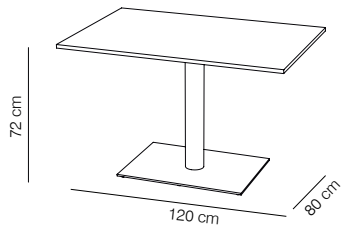

CODE	MODEL	PACKAGING	WEIGHT (kg)	FINISHES			PUBLIC PRICE
				BASE	TABLE TOP		
ST72C60M	60x60	81.5x83.5x12.5 (0.08) 50x42x75.5 (0.15) x2	27.2	white, black or silver	low pressure laminate	white, black	502 €
ST72C60CN					compact laminate (black edge)	white, black	526 € *
ST72C60HPL					HPL	white, black	781 € *
ST72C60CB					compact laminate (white edge)	white	781 € *
ST72C70M	70x70	91.5x93.5x12.5 (0.10) 60x52x75.5 (0.23) x2	29.7	white, black or silver	low pressure laminate	white, black	547 €
ST72C70CN					compact laminate (black edge)	white, black	612 € *
ST72C70HPL					HPL	white, black	931 € *
ST72C70CB					compact laminate (white edge)	white	931 € *
ST72C80M	80x80	101.5x103.5x12.5 (0.13) 60x52x75.5 (0.23) x2	31.3	white, black or silver	low pressure laminate	white, black	558 €
ST72C80CN					compact laminate (black edge)	white, black	665 € *
ST72C80HPL					HPL	white, black	940 € *
ST72C80CB					compact laminate (white edge)	white	940 € *
ST72C90M	90x90	111.5x113.5x12.5 (0.15) 60x52x75.5 (0.23) x2	32.7	white, black or silver	low pressure laminate	white, black	565 €
ST72C90CN					compact laminate (black edge)	white, black	739 € *
ST72C90HPL					HPL	white, black	1.138 € *
ST72C90CB					compact laminate (white edge)	white	1.138 € *
ST72R60M	120x60	141.5x133.5x12.5 (0.23) 80x72x75.5 (0.42) x2	40.4	white, black or silver	low pressure laminate	white, black	599 €
ST72R60CN					compact laminate (black edge)	white, black	781 € *
ST72R60HPL					HPL	white, black	1.211 € *
ST72R60CB					compact laminate (white edge)	white	1.211 € *
ST72R80M	120x80	141.5x133.5x12.5 (0.23) 80x72x75.5 (0.42) x2	47.4	white, black or silver	low pressure laminate	white, black	634 €
ST72R80CN					compact laminate (black edge)	white, black	871 € *
ST72R80HPL					HPL	white, black	1.351 € *
ST72R80CB					compact laminate (white edge)	white	1.351 € *

* The prices shown for HPL table tops and compact are calculated for orders less than 5 units. Please check prices for larger quantities.

Stan

BY STUDIO VCCB

HEIGHT 110

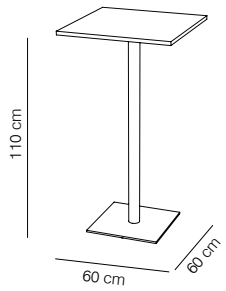

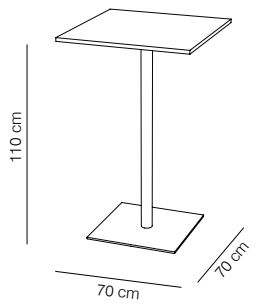

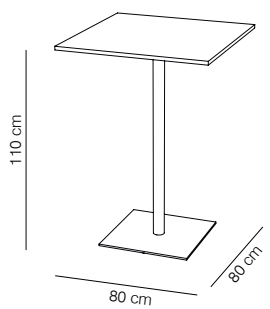

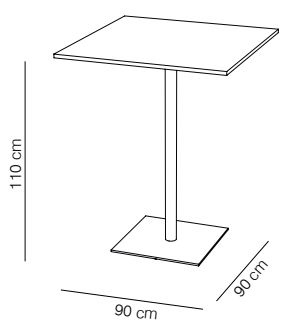

CODE	MODEL	PACKAGING	WEIGHT (kg)	FINISHES			PUBLIC PRICE
				BASE	TABLE TOP		
ST110C60M	60x60	81.5x83.5x12.5 (0.18) 50x42x114.5 (0.24) x2	25.7	white, black or silver	low pressure laminate	white, black	511 €
ST110C60CN					compact laminate (black edge)	white, black	535 € *
ST110C60HPL					HPL	white, black	791 € *
ST110C60CB					compact laminate (white edge)	white	791 € *
ST110C70M	70x70	91.5x93.5x12.5 (0.10) 60x52x114.5 (0.35) x2	30.7	white, black or silver	low pressure laminate	white, black	558 €
ST110C70CN					compact laminate (black edge)	white, black	622 € *
ST110C70HPL					HPL	white, black	942 € *
ST110C70CB					compact laminate (white edge)	white	942 € *
ST110C80M	80x80	101.5x103.5x12.5 (0.13) 60x52x114.5 (0.35) x2	32.3	white, black or silver	low pressure laminate	white, black	569 €
ST110C80CN					compact laminate (black edge)	white, black	676 € *
ST110C80HPL					HPL	white, black	949 € *
ST110C80CB					compact laminate (white edge)	white	949 € *
ST110C90M	90x90	111.5x113.5x12.5 (0.15) 60x52x114.5 (0.35) x2	33.7	white, black or silver	low pressure laminate	white, black	575 €
ST110C90CN					compact laminate (black edge)	white, black	750 € *
ST110C90HPL					HPL	white, black	1.147 € *
ST110C90CB					compact laminate (white edge)	white	1.147 € *

* The prices shown for HPL table tops and compact are calculated for orders less than 5 units. Please check prices for larger quantities.

ACCESORIES

STCO - Top link system for square tables.

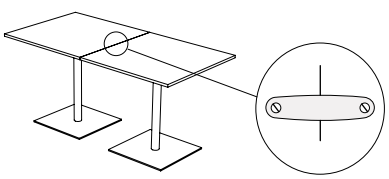

CODE	MODEL	PACKAGING	PUBLIC PRICE
STCO	TOP LINK SYSTEM	-	32 €

Stan

BY STUDIO VCCB

HEIGHT 45

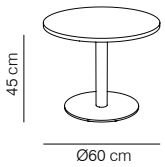

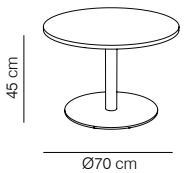

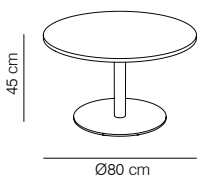

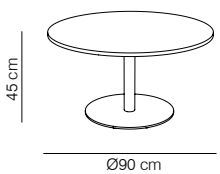

CODE	MODEL	PACKAGING	WEIGHT (kg)	FINISHES			PUBLIC PRICE
				BASE	TABLE TOP		
ST45D60M	ROUND 60	81.5x83.5x12.5 (0.08) 50x42x50 (0.10) x2	26.2	white, black or silver	low pressure laminate	white, black	581 €
ST45D60CN					compact laminate (black edge)	white, black	611 € *
ST45D60HPL					HPL	white, black	769 € *
ST45D60CB					compact laminate (white edge)	white	769 € *
ST45D70M	ROUND 70	91.5x93.5x12.5 (0.10) 60x52x50 (0.15) x2	28.7	white, black or silver	low pressure laminate	white, black	622 €
ST45D70CN					compact laminate (black edge)	white, black	636 € *
ST45D70HPL					HPL	white, black	917 € *
ST45D70CB					compact laminate (white edge)	white	917 € *
ST45D80M	ROUND 80	101.5x103.5x12.5 (0.13) 60x52x50 (0.15) x2	30.3	white, black or silver	low pressure laminate	white, black	634 €
ST45D80CN					compact laminate (black edge)	white, black	652 € *
ST45D80HPL					HPL	white, black	924 € *
ST45D80CB					compact laminate (white edge)	white	924 € *
ST45D90M	ROUND 90	111.5x113.5x12.5 (0.15) 60x52x50 (0.15) x2	31.7	white, black or silver	low pressure laminate	white, black	647 €
ST45D90CN					compact laminate (black edge)	white, black	726 € *
ST45D90HPL					HPL	white, black	1.122 € *
ST45D90CB					compact laminate (white edge)	white	1.122 € *

* The prices shown for HPL table tops and compact are calculated for orders less than 5 units. Please check prices for larger quantities.

Stan

BY STUDIO VCCB

HEIGHT 72

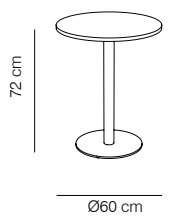

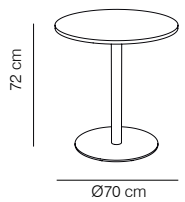

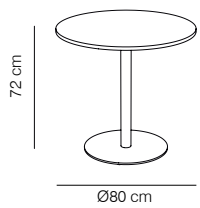

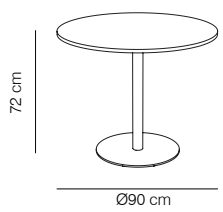

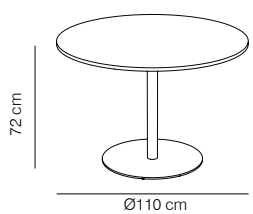

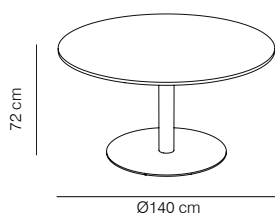

CODE	MODEL	PACKAGING	WEIGHT (kg)	FINISHES			PUBLIC PRICE
				BASE	TABLE TOP		
ST72D60M	ROUND 60	81.5x83.5x12.5 (0.08) 50x42x75.5 (0.15) x2	27.2	white, black or silver	low pressure laminate	white, black	590 €
ST72D60CN					compact laminate (black edge)	white, black	620 € *
ST72D60HPL					HPL	white, black	779 € *
ST72D60CB					compact laminate (white edge)	white	779 € *
ST72D70M	ROUND 70	91.5x93.5x12.5 (0.10) 60x52x75.5 (0.23) x2	29.7	white, black or silver	low pressure laminate	white, black	630 €
ST72D70CN					compact laminate (black edge)	white, black	706 € *
ST72D70HPL					HPL	white, black	924 € *
ST72D70CB					compact laminate (white edge)	white	924 € *
ST72D80M	ROUND 80	101.5x103.5x12.5 (0.13) 60x52x75.5 (0.23) x2	31.3	white, black or silver	low pressure laminate	white, black	643 €
ST72D80CN					compact laminate (black edge)	white, black	659 € *
ST72D80HPL					HPL	white, black	934 € *
ST72D80CB					compact laminate (white edge)	white	934 € *
ST72D90M	ROUND 90	111.5x113.5x12.5 (0.15) 60x52x75.5 (0.23) x2	32.7	white, black or silver	low pressure laminate	white, black	654 €
ST72D90CN					compact laminate (black edge)	white, black	733 € *
ST72D90HPL					HPL	white, black	1.130 € *
ST72D90CB					compact laminate (white edge)	white	1.130 €
ST72D110M	ROUND 110	131.5x143.5x12.5 (0.23) 70x62x75.5 (0.32) x2	40.8	white, black or silver	low pressure laminate	white, black	731 €
ST72D110CN					compact laminate (black edge)	white, black	924 € *
ST72D110HPL					HPL	white, black	1.434 € *
ST72D110CB					compact laminate (white edge)	white	1.434 € *
ST72D140M	ROUND 140	141.5x133.5x12.5 (0.23) 80x72x75.5 (0.42) x2	47.4	white, black or silver	low pressure laminate	white, black	1.290 €
ST72D140CN					compact laminate (black edge)	white, black	1.774 € *
ST72D140HPL					HPL	white, black	2.435 € *
ST72D140CB					compact laminate (white edge)	white	2.435 € *

* The prices shown for HPL table tops and compact are calculated for orders less than 5 units. Please check prices for larger quantities.

Stan

BY STUDIO VCCB

HEIGHT 110

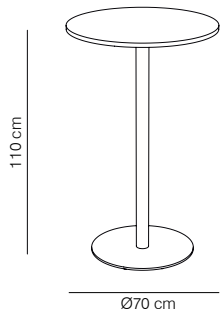

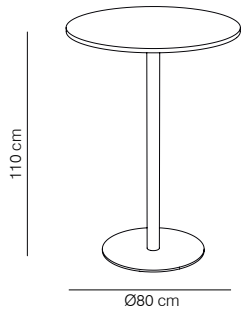

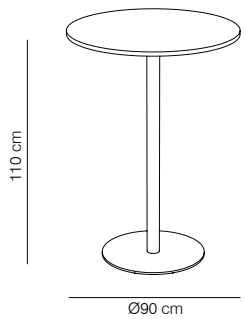

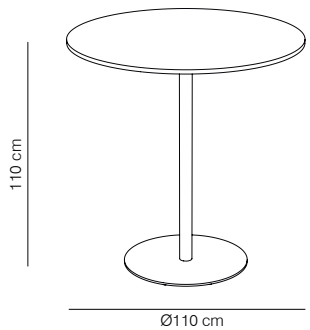

CODE	MODEL	PACKAGING	WEIGHT (kg)	FINISHES			PUBLIC PRICE
				BASE	TABLE TOP		
ST110D70M	ROUND 70	91.5x93.5x12.5 (0.10) 60x52x114.5 (0.35) x2	30.7	white, black or silver	low pressure laminate	white, black	641 €
ST110D70CN					compact laminate (black edge)	white, black	716 € *
ST110D70HPL					HPL	white, black	936 € *
ST110D70CB					compact laminate (white edge)	white	936 € *
ST110D80M	ROUND 80	101.5x103.5x12.5 (0.13) 60x52x114.5 (0.35) x2	32.3	white, black or silver	low pressure laminate	white, black	653 €
ST110D80CN					compact laminate (black edge)	white, black	670 € *
ST110D80HPL					HPL	white, black	943 € *
ST110D80CB					compact laminate (white edge)	white	943 € *
ST110D90M	ROUND 90	111.5x113.5x12.5 (0.15) 60x52x114.5 (0.35) x2	33.7	white, black or silver	low pressure laminate	white, black	665 €
ST110D90CN					compact laminate (black edge)	white, black	744 € *
ST110D90HPL					HPL	white, black	1.141 € *
ST110D90CB					compact laminate (white edge)	white	1.141 € *
ST110D110M	ROUND 110	131.5x143.5x12.5 (0.23) 70x62x114.5 (0.49) x2	40.8	white, black or silver	low pressure laminate	white, black	740 €
ST110D110CN					compact laminate (black edge)	white, black	1.319 € *
ST110D110HPL					HPL	white, black	1.319 € *
ST110D110CB					compact laminate (white edge)	white	1.418 € *

* The prices shown for HPL table tops and compact are calculated for orders less than 5 units. Please check prices for larger quantities.

Eli

BY STUDIO VCCB

Eli

BY STUDIO VCCB

Table top available in different measures, materials and thickness:

· 15 mm thick MDF table top lacquered with the finishes of our collection.

· Low Pressure Laminate (LPL) thickness 19 mm with 1,5 mm PVC edge, in white or black.

· 12 mm thick compact laminated table top. The edge can be in white or black. With a black edge, the surface of the tabletop can be white or black; for a white edge, it can be white.

· High Pressure Laminate (HPL) thickness 19 mm with 1,5 mm PVC edge, in white or black.

Calibrated steel structure powder coated in thermoreinforced polyester in black or white.

Four star aluminium legs on the base.

NB: The height of the table varies according to the thickness of the different table tops. The height indicated below refers to the MDF table.

Thickness and type of table top edges available for each material:

MDF — 15 mm

Low Pressure Laminate | HPL — 19 mm

Compact — 12 mm

HEIGHT 40

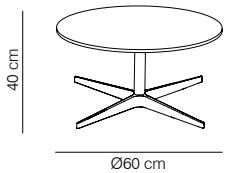

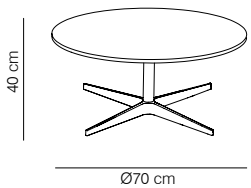

CODE	MODEL	PACKAGING	WEIGHT (kg)	FINISHES			PUBLIC PRICE
				BASE	TABLE TOP		
ELI40D60TX	ROUND 60	52x55x53 (0.15) 76x76x7 (0.05) x2	11.8	white, black	lacquered (microtexturized)	white, black and grey	467 €
						sand, tobacco, smoke grey and silver	485 €
						red, mustard, green, blue and bronze	524 €
ELI40D60M					low pressure laminate	white, black	481 €
ELI40D60CN					compact laminate (black edge)	white, black	500 € *
ELI40D60HPL					HPL	white, black	509 € *
ELI40D60CB					compact laminate (white edge)	white	628 € *
ELI40D70TX	ROUND 70	52x55x53 (0.15) 96x96x7 (0.07) x2	13.7	white, black	lacquered (microtexturized)	white, black and grey	500 €
						sand, tobacco, smoke grey and silver	520 €
						red, mustard, green, blue and bronze	562 €
ELI40D70M					low pressure laminate	white, black	491 €
ELI40D70CN					compact laminate (black edge)	white, black	526 € *
ELI40D70HPL					HPL	white, black	548 € *
ELI40D70CB					compact laminate (white edge)	white	713 € *

* The prices shown for HPL table tops and compact are calculated for orders less than 5 units. Please check prices for larger quantities.

OPTIONS FOR FINISHES:

- ESTRUCTURE: white and black.
- TOP - LACQUERED (microtexturized):
  COLORS 1: white, black and grey.
  COLORS 2: sand, tobacco, smoke grey and silver.
  COLORS 3: red, mustard, green, blue and bronze.
- LOW PRESSURE LAMINATE: white and black.
- COMPACT LAMINATE (black edge): white and black.
- COMPACT LAMINATE (white edge): white.
- HPL: white and black.

Eli

BY STUDIO VCCB

HEIGHT 74

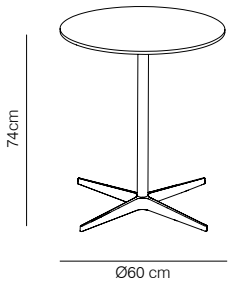

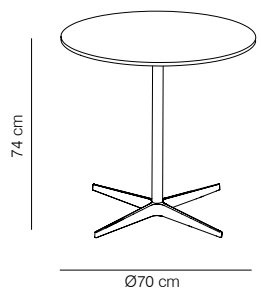

CODE	MODEL	PACKAGING	WEIGHT (kg)	FINISHES			PUBLIC PRICE
				BASE	TABLE TOP		
ELI74D60TX	ROUND 60	68x55x88 (0.32) 76x76x7 (0.05) x2	15.3	white, black	lacquered (microtexturized)	white, black and grey	474 €
						sand, tobacco, smoke grey and silver	493 €
						red, mustard, green, blue and bronze	532 €
ELI74D60M					low pressure laminate	white, black	486 €
ELI74D60CN					compact laminate (black edge)	white, black	505 € *
ELI74D60HPL					HPL	white, black	514 € *
ELI74D60CB					compact laminate (white edge)	white	632 € *
ELI74D70TX	ROUND 70	68x55x88 (0.32) 96x96x7 (0.07) x2	17.2	white, black	lacquered (microtexturized)	white, black and grey	505 €
						sand, tobacco, smoke grey and silver	525 €
						red, mustard, green, blue and bronze	567 €
ELI74D70M					low pressure laminate	white, black	496 €
ELI74D70CN					compact laminate (black edge)	white, black	530 € *
ELI74D70HPL					HPL	white, black	553 € *
ELI74D70CB					compact laminate (white edge)	white	718 € *

* The prices shown for HPL table tops and compact are calculated for orders less than 5 units. Please check prices for larger quantities.

OPTIONS FOR FINISHES:

- ESTRUCTURE: white and black.
- TOP - LACQUERED (microtexturized):
  COLORS 1: white, black and grey.
  COLORS 2: sand, tobacco, smoke grey and silver.
  COLORS 3: red, mustard, green, blue and bronze.
- LOW PRESSURE LAMINATE: white and black.
- COMPACT LAMINATE (black edge): white and black.
- COMPACT LAMINATE (white edge): white.
- HPL: white and black.

Eli

BY STUDIO VCCB

HEIGHT 110

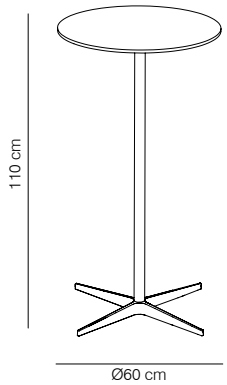

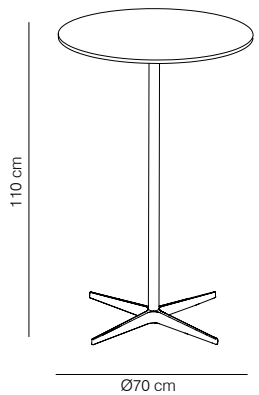

CODE	MODEL	PACKAGING		FINISHES			PUBLIC PRICE
				BASE	TABLE TOP		
ELI110D60TX	ROUND 60	68x55x114 (0.43) 76x76x7 (0.05) x2	16.3	white, black	lacquered (microtexturized)	white, black and grey	480 €
						sand, tobacco, smoke grey and silver	499 €
						red, mustard, green, blue and bronze	539 €
ELI110D60M					low pressure laminate	white, black	492 €
ELI110D60CN					compact laminate (black edge)	white, black	511 € *
ELI110D60HPL					HPL	white, black	520 € *
ELI110D60CB					compact laminate (white edge)	white	638 € *
ELI110D70TX	ROUND 70	68x55x114 (0.43) 96x96x7 (0.07) x2	18.2	white, black	lacquered (microtexturized)	white, black and grey	511 €
						sand, tobacco, smoke grey and silver	532 €
						red, mustard, green, blue and bronze	574 €
ELI110D70M					low pressure laminate	white, black	502 €
ELI110D70CN					compact laminate (black edge)	white, black	536 € *
ELI110D70CB					HPL	white, black	559 € *
ELI110D70HPL					compact laminate (white edge)	white	724 € *

* The prices shown for HPL table tops and compact are calculated for orders less than 5 units. Please check prices for larger quantities.

OPTIONS FOR FINISHES:

- ESTRUCTURE: white and black.
- TOP - LACQUERED (microtexturized):
  COLORS 1: white, black and grey.
  COLORS 2: sand, tobacco, smoke grey and silver.
  COLORS 3: red, mustard, green, blue and bronze.
  - LOW PRESSURE LAMINATE: white and black.
  - COMPACT LAMINATE (black edge): white and black.
  - COMPACT LAMINATE (white edge): white.
  - HPL: white and black.

Sistema

BY LIEVORE ALTHERR MOLINA

Sistema

BY LIEVORE ALTHERR MOLINA

We at VICCARBE have dreamed for years of creating a different type of sofa, unlike anything seen on the market.

SISTEMA is a modular collection composed of independent elements. So, for the first time the client can compose and adapt a sofa using imagination to suit his or her taste, needs and requirement.

There will be a range of different arms, backrest, seats and accessories to choose from. These elements will be expanded with newly developed components each year, thereby creating an innovative concept that adapts to every situation, never seen before.

The upholstered modules are available in three different backrest heights and two seat types; one mounted on a metal structure with wooden legs or calibrated steel, designed for contract. And another module with the seats reaching till the floor, with height leveling feet, for domestic spaces.

The Sofa SISTEMA is designed to obtain maximum comfort without additional pillows; nevertheless we offer well-proportioned accessories.

Thanks to the poufs, linear or angular compositions can be configured, thus to adapt to any space.

BEST of year HONOREE 2016
INTERIOR DESIGN

Test Certificates:
ANSI/BIFMA X5.4-2012.1 and UNE EN 16139:2013.

A sketch must be included with your order to avoid any sort of misunderstanding. Remember that “right” and “left” are understood to be from the perspective of a person looking at the object from the front. The more information you include with your order, the lower the possibility of error.

VAR The number of boxes and their dimensions will vary depending on the composition chosen.

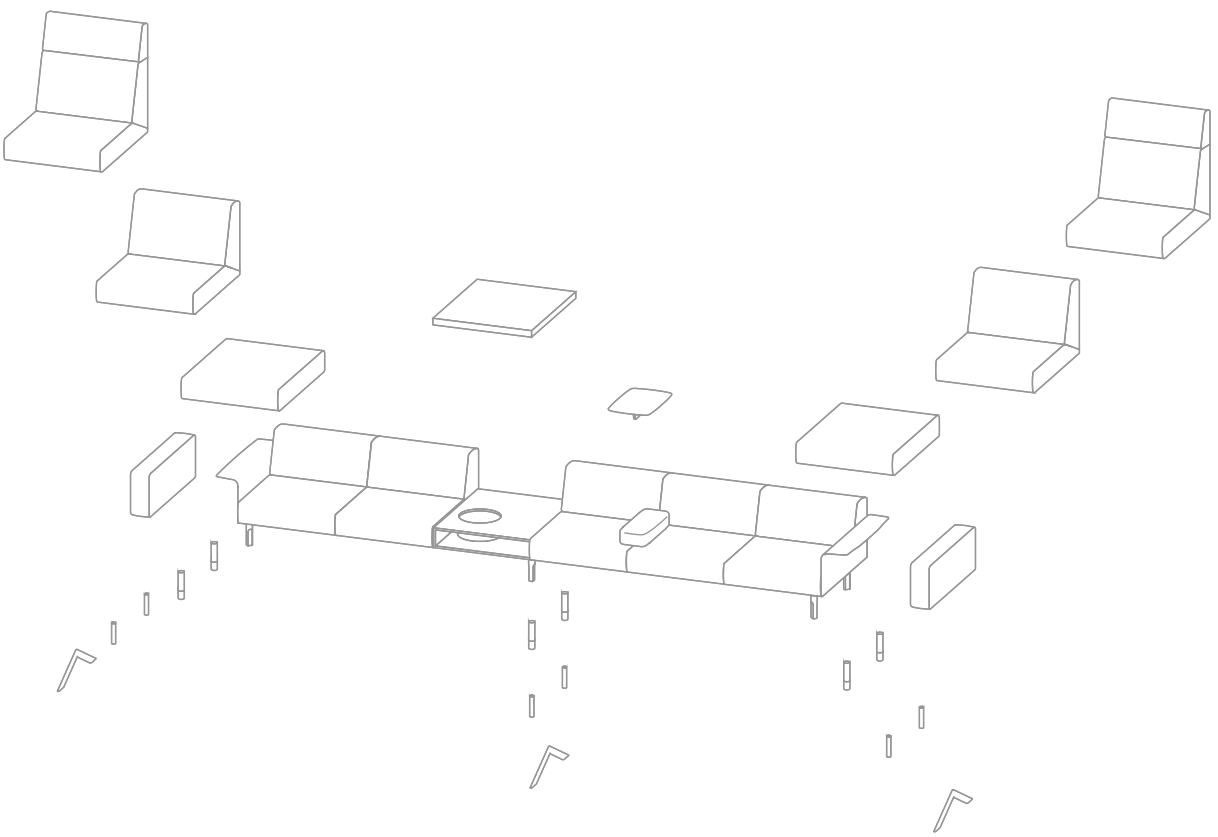

Sistema

BY LIEVORE ALTHERR MOLINA

SOFA WITH LEGS

Here we show all the elements compatible with the SYSTEM sofa with legs:

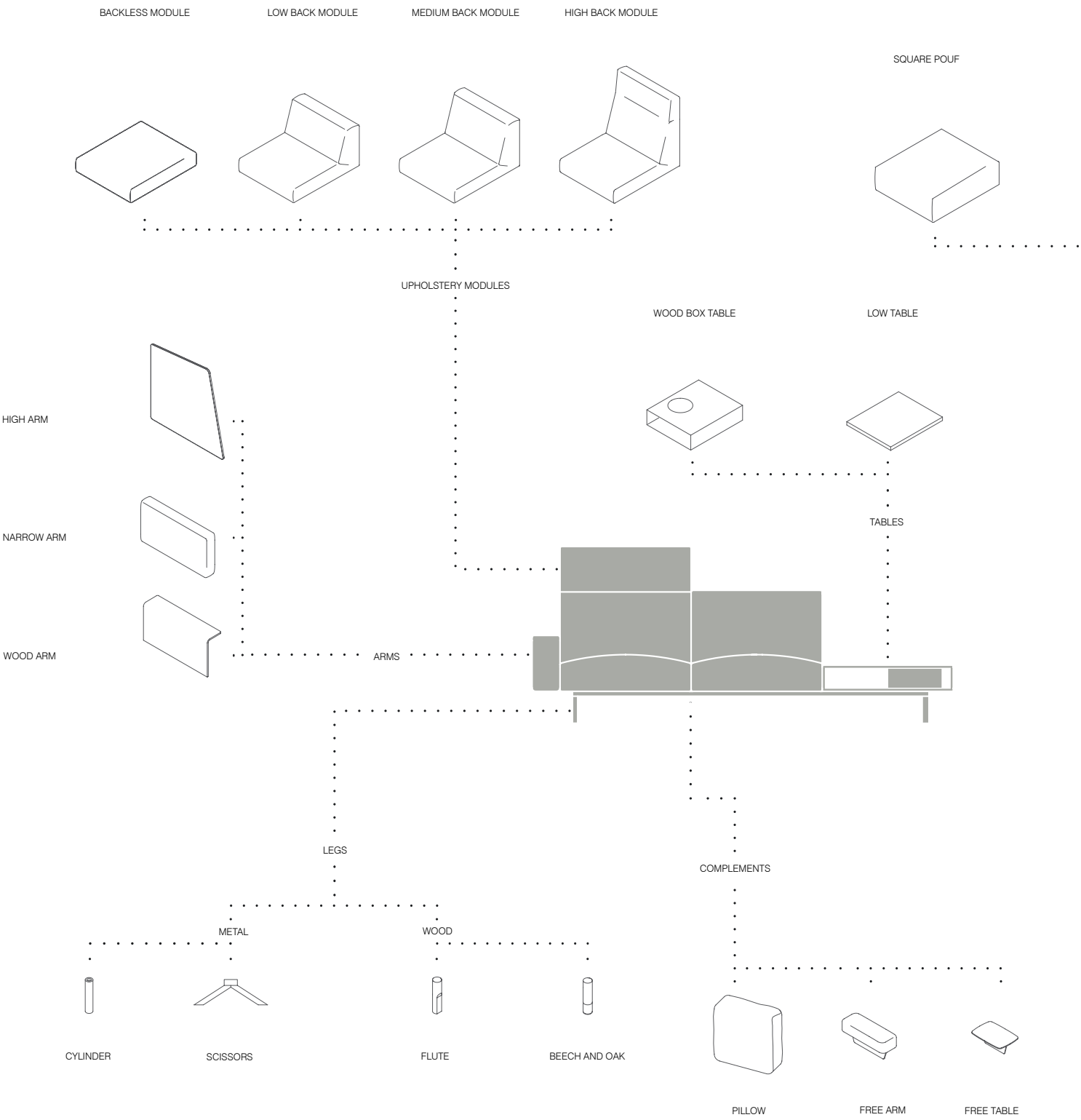

Sistema

BY LIEVORE ALTHERR MOLINA

SOFA WITHOUT LEGS

Here we show all the elements compatible with the SYSTEM sofa without legs:

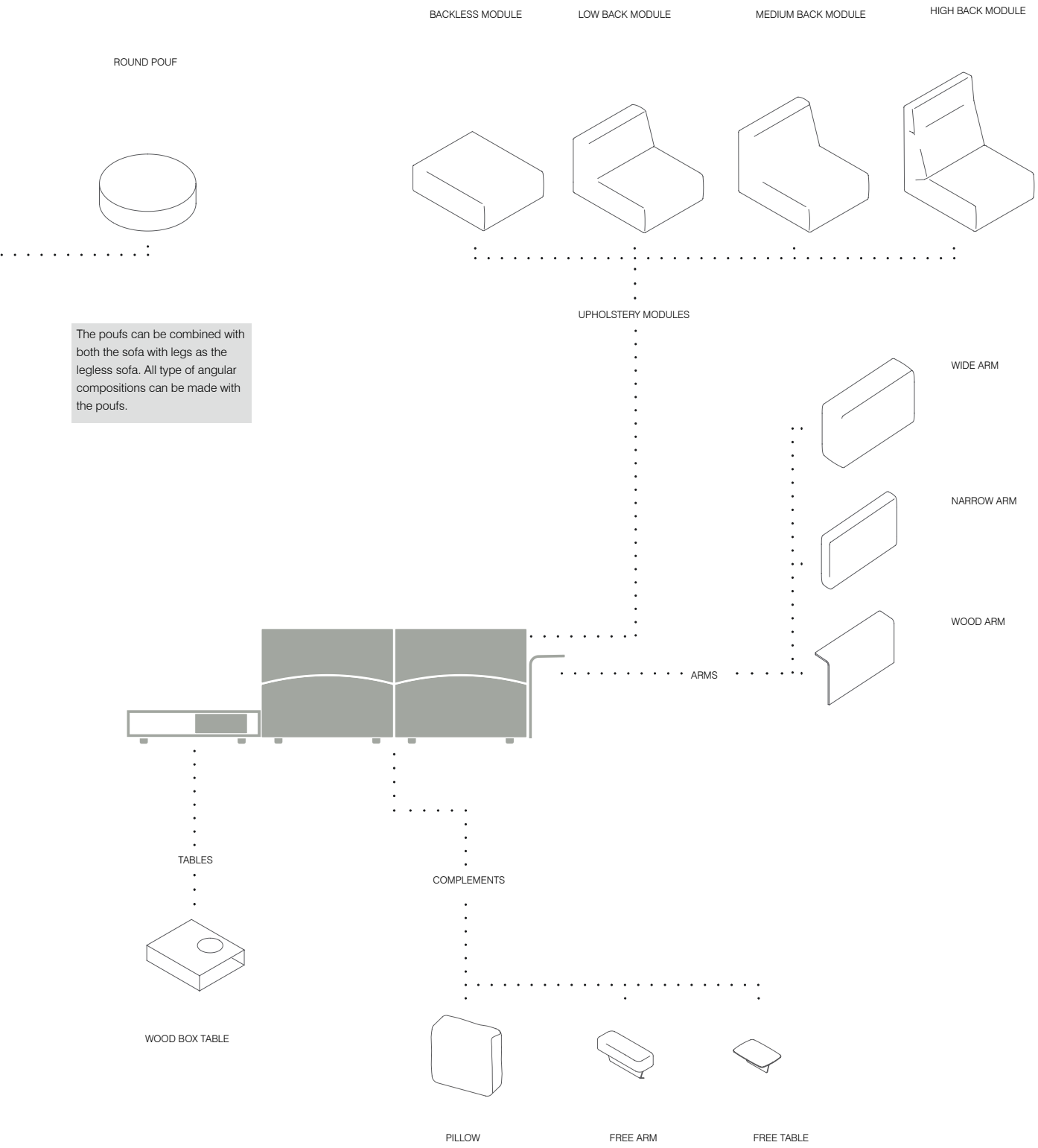

The poufs can be combined with both the sofa with legs as the legless sofa. All type of angular compositions can be made with the poufs.

Sistema

BY LIEVORE ALTHERR MOLINA

SOFA WITH LEGS

MODULES / SOFT UPHOLSTERY

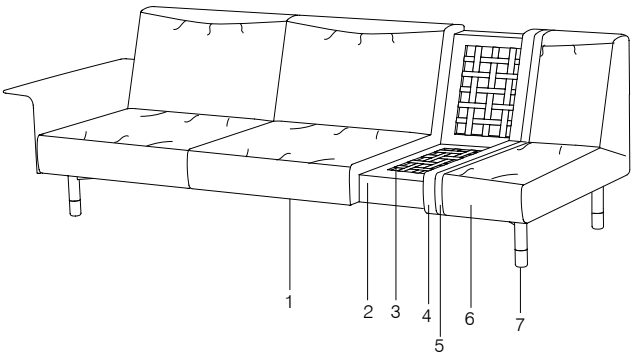

1- Frame of calibrated steel base powder coated in thermoreinforced polyester in shadow color.
2- Interior structure in steel, solid wood and plywood.
3- Woven seat and back structure.
4- Expanded polyuretane foam in different densities.
5- Polyester fibre covering with down filling.
6- Fabric or leather.
7- Legs.

SISSRPS - BACKLESS MODULE / SOFT UPHOLSTERY

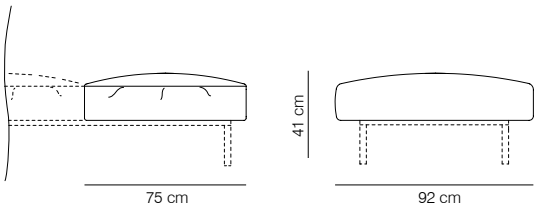

SISBPS - LOW BACK MODULE / SOFT UPHOLSTERY

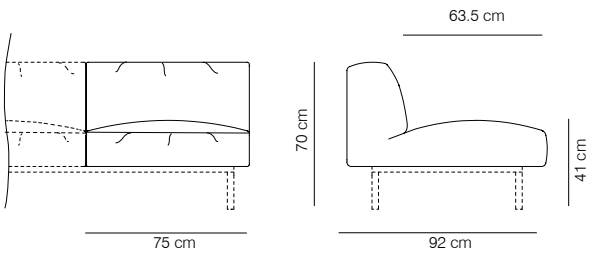

SISMPS - MEDIUM BACK MODULE / SOFT UPHOLSTERY

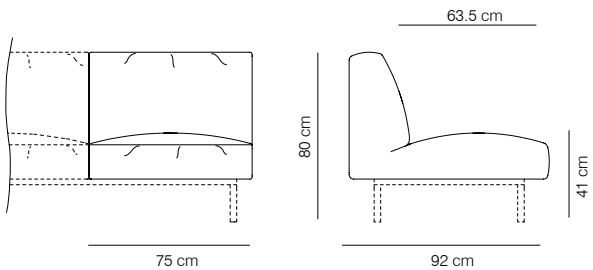

SISAPS - HIGH BACK MODULE / SOFT UPHOLSTERY

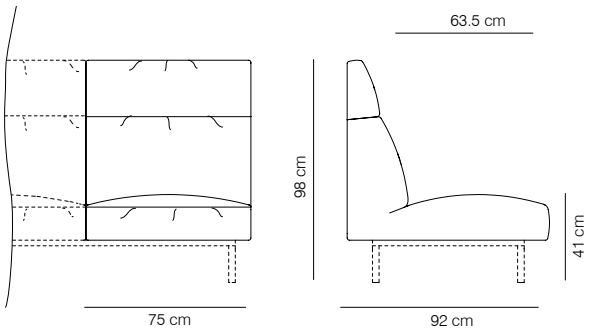

The sofas with legs must be composed with a minimum of two modules.

Needed fabric for material 1.40m wide:
SISSRPS: 2.20 m
SISBPS: 3.40 m
SISMPS: 3.60 m
SISAPS: 4.20 m

There is no possible to combine smooth upholstery modules and soft upholstery modules

Fabrics offered for soft upholstery:

viccarbe
VULCANO, GAUDI, MATISS, SHADOW, SIENA, LIDO, REGIO, FACET, SHABBY, GUBBIO, RICO, VELOURS CAVIAR and SERA.

kvadrat
FIELD, MESSENGER, TONUS 4, CLARA, DIVINA, DIVINA MELAGNE and HALLINGDAL 65.

camira
FIGHTER, STEP, STEP MELAGNE, FAME and EUROPOST 2.

Gabriel
ADVANTAGE, CHEATEAU PLUS, CITAEL, XTREME PLUS, LUCIA, AQUARIUS, MAIN LINE PLUS, BLAZER 1 and BLAZER 2.

Sistema

BY LIEVORE ALTHERR MOLINA

CODE	MODEL	PACKAGING	WEIGHT (kg)	FINISHES	PUBLIC PRICE (Fire Re. Foam)	PUBLIC PRICE
SISSRPS-1	BACKLESS MODULE / SOFT UPHOLSTERY	25x97x80 (0.19)	26	COM / COL	940 €	913 €
SISSRPS-2				G2	940 €	913 €
SISSRPS-3				G3	1.013 €	983 €
SISSRPS-4				G4	1.076 €	1.045 €
SISSRPS-5				G5	1.144 €	1.111 €
SISBPS-1	LOW BACK MODULE / SOFT UPHOLSTERY	50x97x80 (0.39)	28	COM / COL	1.364 €	1.324 €
SISBPS-2				G2	1.364 €	1.324 €
SISBPS-3				G3	1.513 €	1.469 €
SISBPS-4				G4	1.656 €	1.608 €
SISBPS-5				G5	1.800 €	1.748 €
SISMPS-1	MEDIUM BACK MODULE / SOFT UPHOLSTERY	60x97x80 (0.47)	28.5	COM / COL	1.378 €	1.338 €
SISMPS-2				G2	1.378 €	1.338 €
SISMPS-3				G3	1.530 €	1.485 €
SISMPS-4				G4	1.670 €	1.621 €
SISMPS-5				G5	1.814 €	1.761 €
SISAPS-1	HIGH BACK MODULE / SOFT UPHOLSTERY	82x97x80 (0.64)	30	COM / COL	1.513 €	1.469 €
SISAPS-2				G2	1.513 €	1.469 €
SISAPS-3				G3	1.688 €	1.639 €
SISAPS-4				G4	1.859 €	1.805 €
SISAPS-5				G5	2.035 €	1.976 €

Sistema

BY LIEVORE ALTHERR MOLINA

SOFA WITH LEGS

MODULES / SMOOTH UPHOLSTERY

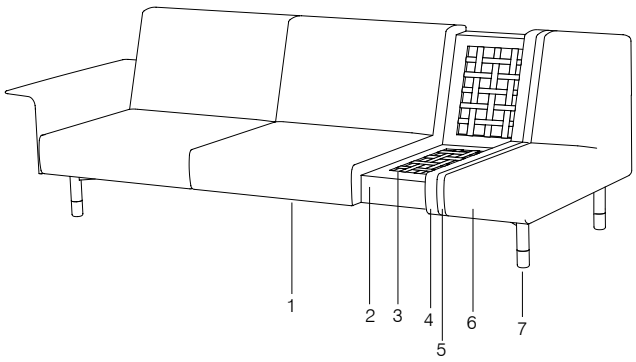

1- Frame of calibrated steel base powder coated in thermoreinforced polyester in shadow.
2- Interior structure in steel, solid wood and plywood.
3- Woven seat and back structure.
4- Expanded polyuretane foam in different densities.
5- Polyester fibre covering.
6- Fabric or leather.
7- Legs.

SISSRP - BACKLESS MODULE / SMOOTH UPHOLSTERY

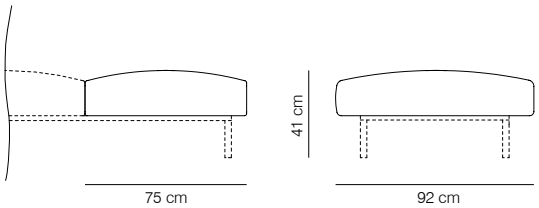

SISBP - LOW BACK MODULE / SMOOTH UPHOLSTERY

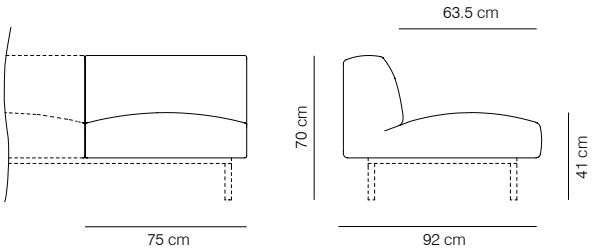

SISMP - MEDIUM BACK MODULE / SMOOTH UPHOLSTERY

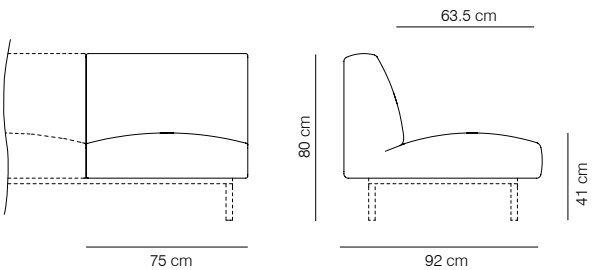

SISAP - HIGH BACK MODULE / SMOOTH UPHOLSTERY

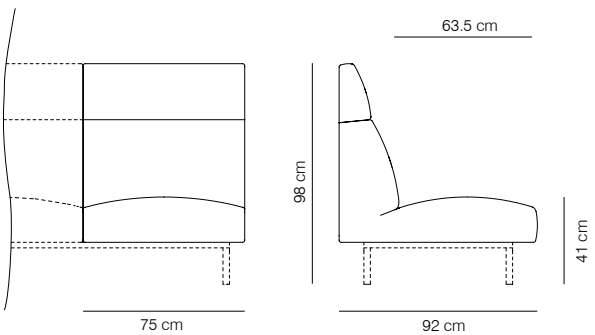

The sofas with legs must be composed with a minimum of two modules.

Needed fabric for material 1.40 m wide:
SISSRP: 2.20 m
SISBP: 3.40 m
SISMP: 3.60 m
SISAP: 4.20 m

There is no possible to combine smooth upholstery modules and soft upholstery modules

Sistema

BY LIEVORE ALTHERR MOLINA

CODE	MODEL	PACKAGING	WEIGHT (kg)	FINISHES	PUBLIC PRICE (Fire Re. Foam)	PUBLIC PRICE
SISSRP-1	BACKLESS MODULE / SMOOTH UPHOLSTERY	25x97x80 (0.19)	26	COM / COL	818 €	794 €
SISSRP-2				G2	818 €	794 €
SISSRP-3				G3	880 €	855 €
SISSRP-4				G4	936 €	909 €
SISSRP-5				G5	995 €	966 €
SISBP-1	LOW BACK MODULE / SMOOTH UPHOLSTERY	50x97x80 (0.39)	28	COM / COL	1.186 €	1.152 €
SISBP-2				G2	1.186 €	1.152 €
SISBP-3				G3	1.315 €	1.277 €
SISBP-4				G4	1.440 €	1.398 €
SISBP-5				G5	1.566 €	1.520 €
SISMP-1	MEDIUM BACK MODULE / SMOOTH UPHOLSTERY	60x97x80 (0.47)	28.5	COM / COL	1.198 €	1.163 €
SISMP-2				G2	1.198 €	1.163 €
SISMP-3				G3	1.330 €	1.291 €
SISMP-4				G4	1.453 €	1.410 €
SISMP-5				G5	1.577 €	1.531 €
SISAP-1	HIGH BACK MODULE / SMOOTH UPHOLSTERY	82x97x80 (0.64)	30	COM / COL	1.315 €	1.277 €
SISAP-2				G2	1.315 €	1.277 €
SISAP-3				G3	1.468 €	1.426 €
SISAP-4				G4	1.617 €	1.570 €
SISAP-5				G5	1.770 €	1.718 €

Sistema

BY LIEVORE ALTHERR MOLINA

Note: Available for the wooden legs, felt glides. If not indicated, the sofa will be produced with plastic glides.

LEG OPTIONS

SISPMET - CYLINDER LEGS

Calibrated steel tube powder coated with tempered polyester, in the finishes of our collection.

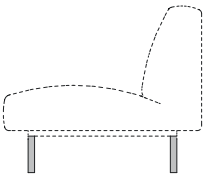

SISPFL - FLUTE LEGS

Wooden solid oak legs, with carvings on the sides, stained in the finishes of our collection.

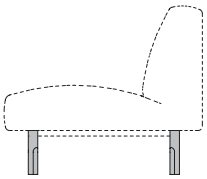

SISPRO - BEECH AND OAK LEGS

Solid oak and beech wood legs stained in transparent.

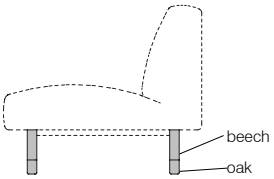

SISPTI - SCISSORS LEGS

Calibrated steel tube powder coated with tempered polyester, in the finishes of our collection.

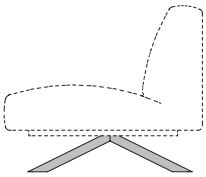

CODE	MODEL	PACKAGING	WEIGHT (kg)	FINISHES		PUBLIC PRICE
SISPMET	CYLINDER LEGS	6x23x11 (0.01)	0.6	white, black, sand, altea blue or orange fluorescent		55 € *
SISPFL	FLUTE LEGS	6x23x11 (0.01)	0.4	stained	matt oak, cognac, ash and wenge	167 € *
SISPRO	BEECH AND OAK LEGS	6x23x11 (0.01)	0.4	stained	matt oak, cognac, ash and wenge	167 € *
SISPTI	SCISSORS LEGS	-	-	white, black, sand, altea blue or orange fluorescent		187 €

* Legs are priced for two units.
Due to the fact that the wood used is natural, the finish may vary.

TABLE OPTIONS

SISMB - LOW TABLE

Table in lacquered microtexturized MDF or stained oak plywood with the finishes of our collection.

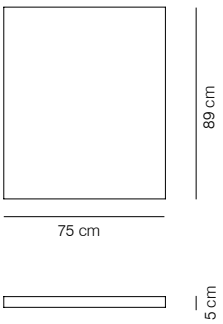

SISMCP - WOOD BOX TABLE

Table with a stained European oak plywood or lacquered microtexturized MDF tabletop in the finishes of our collection. Interior plywood cylinder lacquered with the finishes of our collection.

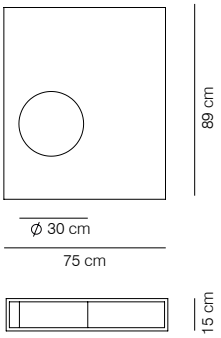

CODE	MODEL	PACKAGING	WEIGHT (kg)	FINISHES				PUBLIC PRICE
SISMBRO	LOW TABLE	23x98x83 (0.19)	19	stained (oak plywood)			matt oak, cognac, ash and wenge	499 €
SISMBTX				lacquered (MDF)			white, black and grey	325 €
							sand, tobacco, smoke and silver	350 €
							red, mustard, green, blue and bronze	375 €
SISMCPRO	WOOD BOX TABLE	28x97x80 (0.22)	21	lacquered cylinder	white, black, grey, sand, tobacco, smoke, silver, red, mustard, green, blue and bronze	outside stained	matt oak	988 €
							cognac, ash and wenge	1.134 €
SISMCPTX						outside lacquered	white, black and grey	649 €
							sand, tobacco, smoke and silver	699 €
							red, mustard, green, blue and bronze	748 €

Due to the fact that the wood used is natural, the finish may vary.

Sistema

BY LIEVORE ALTHERR MOLINA

Needed fabric for material 1.40 m wide:
SISBRFP: 2.20 m
SISBRH: 1.30 m
SISBRHC: 2.60 m

ARM OPTIONS

SISBRMP - WOOD ARM

Curved oak plywood arm, stained with the finishes of our collection.

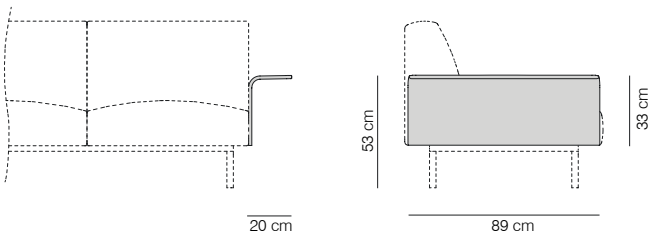

SISBRFP - NARROW ARM

Wood structure covered with polyester fibre and non-deformable, expanded polyurethane foam of varying densities.

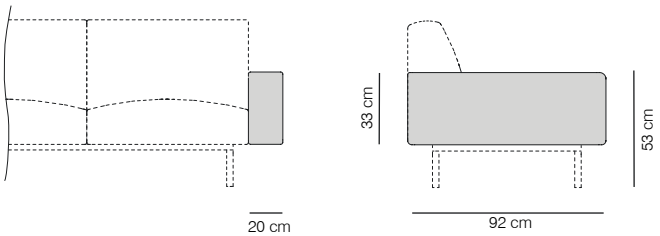

SISBRH - HIGH ARMREST UPHOLSTERED - WOOD

Natural plywood armrest stained with the finishes of our collection on the outside, and upholstered on the inside.

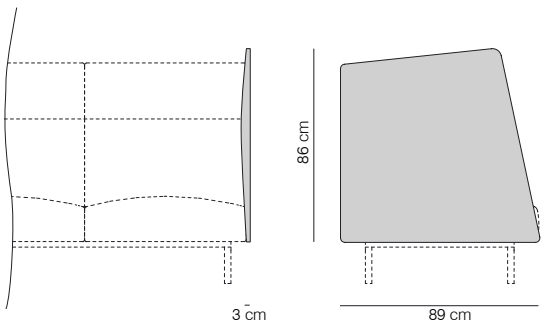

SISBRHC - HIGH FULLY UPHOLSTERED ARMREST

Natural plywood armrest, upholstered on both sides.

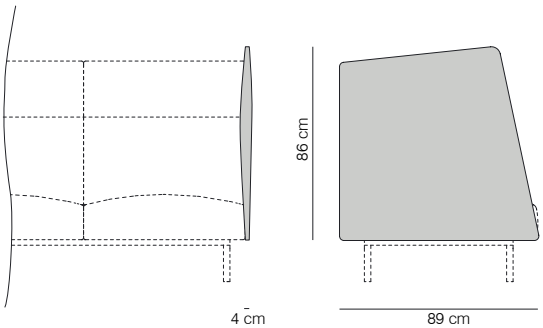

CODE	MODEL	PACKAGING	WEIGHT (kg)	FINISHES				PUBLIC PRICE (Fire Re. Foam)	PUBLIC PRICE
SISBRMP	WOOD ARM	module included in packing the packing dimensions vary according to the back of the module del módulo h(50/60/82) x97x115 cm	-	stained		matt oak, cognac, ash and wenge		-	309 €
SISBRFPS-1	NARROW ARM		-	smooth upholstery		COM / COL		281 €	273 €
SISBRFPS-2						G2		281 €	273 €
SISBRFPS-3						G3		339 €	329 €
SISBRFPS-4						G4		406 €	394 €
SISBRFPS-5						G5		486 €	472 €
SISBRFP-1			-	soft upholstery		COM / COL		323 €	314 €
SISBRFP-2						G2		323 €	314 €
SISBRFP-3						G3		390 €	378 €
SISBRFP-4						G4		467 €	453 €
SISBRFP-5						G5		560 €	543 €
SISBRH-1	HIGH ARMREST UPHOLSTERED - WOOD		-	stained	matt oak, cognac, ash and wenge	smooth upholstery	COM / COL	470 €	457 €
SISBRH-2							G2	470 €	457 €
SISBRH-3							G3	506 €	492 €
SISBRH-4							G4	546 €	530 €
SISBRH-5							G5	583 €	567 €
SISBRHC-1	HIGH FULLY UPHOLSTERED ARMREST		-	smooth upholstery		COM / COL		505 €	491 €
SISBRHC-2						G2		505 €	491 €
SISBRHC-3						G3		583 €	567 €
SISBRHC-4						G4		661 €	641 €
SISBRHC-5						G5		739 €	717 €

Due to the fact that the wood used is natural, the finish may vary.
High arm is only compatible with high-back modules.

Sistema

BY LIEVORE ALTHERR MOLINA

LEG ARRANGEMENT

The distribution and number of legs corresponding to each composition are shown below:

2 SEATS SOFA

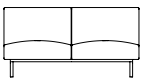

3 SEATS SOFA

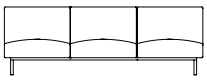

4 SEATS SOFA

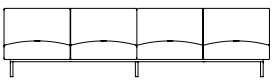

5 SEATS SOFA

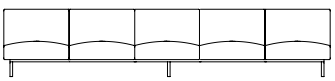

6 SEATS SOFA

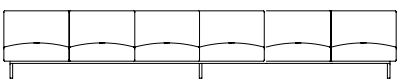

7 SEATS SOFA

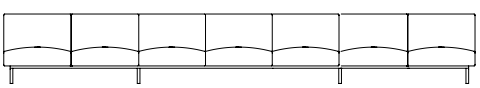

8 SEATS SOFA

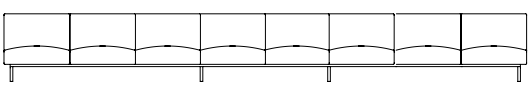

Sistema

BY LIEVORE ALTHERR MOLINA

LEG ARRANGEMENT

The distribution and number of legs corresponding to each composition are shown below:

9 SEATS SOFA

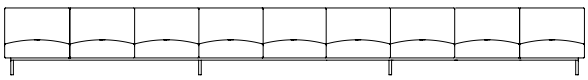

10 SEATS SOFA

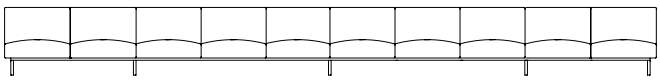

11 SEATS SOFA

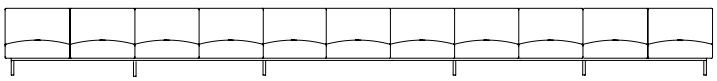

12 SEATS SOFA

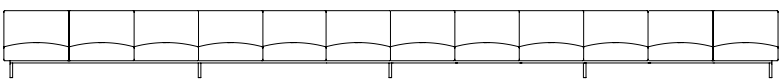

13 SEATS SOFA

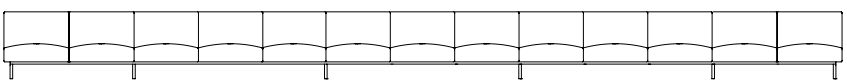

14 SEATS SOFA

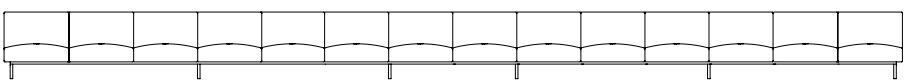

15 SEATS SOFA

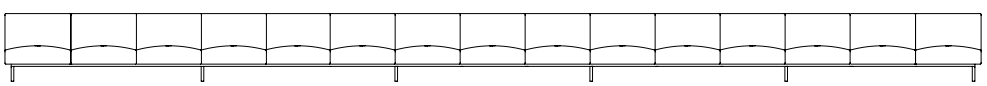

Sistema

BY LIEVORE ALTHERR MOLINA

SOFA WITHOUT LEGS

MODULES / SOFT UPHOLSTERY

SISSRS - BACKLESS MODULE / SOFT UPHOLSTERY

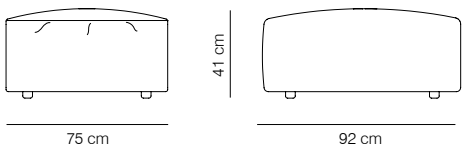

SISBS - LOW BACK MODULE / SOFT UPHOLSTERY

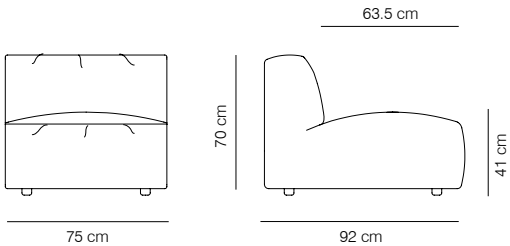

SISMS - MEDIUM BACK MODULE / SOFT UPHOLSTERY

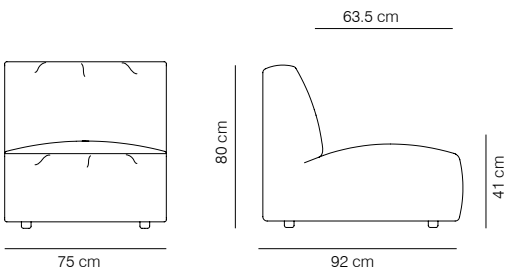

SISAS - HIGH BACK MODULE / SOFT UPHOLSTERY

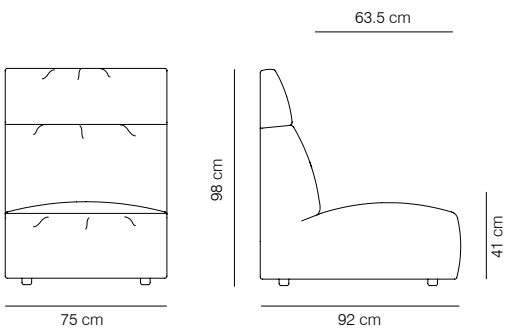

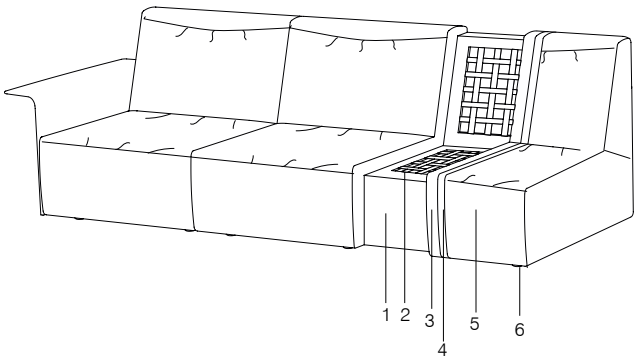

1- Interior structure in steel, solid wood and plywood.
2- Woven seat and back structure.
3- Expanded polyuretane foam in different densities.
4- Polyester fibre covering with down filling.
5- Fabric or leather.
6- Height equalising legs.

Needed fabric for material 1.4 m wide:
SISSRS: 2.9 m
SISBS: 4.4 m
SISMS: 4.6 m
SISAS: 5.2 m

There is no possible to combine smooth upholstery modules and soft upholstery modules

Fabrics offered for soft upholstery:

viccarbe
VULCANO, GAUDI, MATISS, SHADOW, SIENA, LIDO, REGIO, FACET, SHABBY, GUBBIO, RICO, VELOURS CAVIAR and SERA.

kvadrat
FIELD, MESSENGER, TONUS 4, CLARA, DIVINA, DIVINA MELAGNE and HALLINGDAL 65.

camira
FIGHTER, STEP, STEP MELAGNE, FAME and EUROPOST 2.

Gabriel
ADVANTAGE, CHEATEAU PLUS, CITAEL, XTREME PLUS, LUCIA, AQUARIUS, MAIN LINE PLUS, BLAZER 1 and BLAZER 2.

Sistema

BY LIEVORE ALTHERR MOLINA

CODE	MODEL	PACKAGING	WEIGHT (kg)	FINISHES	PUBLIC PRICE (Fire Re. Foam)	PUBLIC PRICE
SISSRS-1	BACKLESS MODULE / SOFT UPHOLSTERY	44x97x80 (0.34)	20.7	COM / COL	845 €	821 €
SISSRS-2				G2	845 €	821 €
SISSRS-3				G3	926 €	899 €
SISSRS-4				G4	996 €	967 €
SISSRS-5				G5	1.071 €	1.040 €
SISBS-1	LOW BACK MODULE / SOFT UPHOLSTERY	70x97x80 (0.54)	-	COM / COL	1.269 €	1.232 €
SISBS-2				G2	1.269 €	1.232 €
SISBS-3				G3	1.450 €	1.408 €
SISBS-4				G4	1.610 €	1.563 €
SISBS-5				G5	1.800 €	1.748 €
SISMS-1	MEDIUM BACK MODULE / SOFT UPHOLSTERY	80x97x80 (0.62)	30.8	COM / COL	1.285 €	1.247 €
SISMS-2				G2	1.285 €	1.247 €
SISMS-3				G3	1.470 €	1.427 €
SISMS-4				G4	1.593 €	1.547 €
SISMS-5				G5	1.754 €	1.703 €
SISAS-1	HIGH BACK MODULE / SOFT UPHOLSTERY	102x97x80 (0.79)	-	COM / COL	1.431 €	1.389 €
SISAS-2				G2	1.431 €	1.389 €
SISAS-3				G3	1.625 €	1.577 €
SISAS-4				G4	1.816 €	1.763 €
SISAS-5				G5	2.010 €	1.951 €

Sistema

BY LIEVORE ALTHERR MOLINA

SOFA WITHOUT LEGS

MODULES / SMOOTH UPHOLSTERY

SISSR - BACKLESS MODULE / SMOOTH UPHOLSTERY

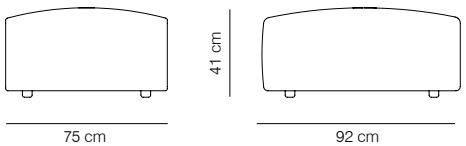

SISB - LOW BACK MODULE / SMOOTH UPHOLSTERY

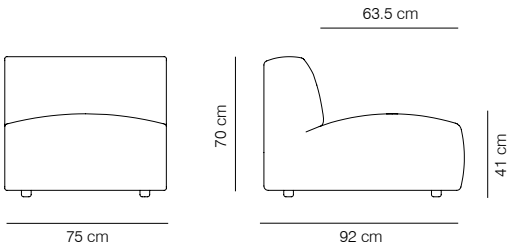

SISM - MEDIUM BACK MODULE / SMOOTH UPHOLSTERY

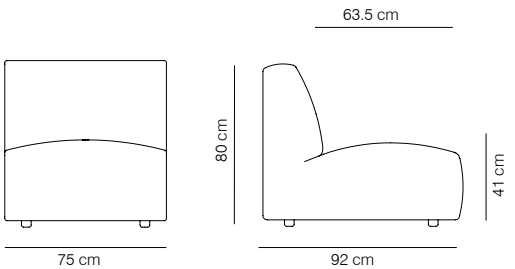

SISA - HIGH BACK MODULE / SMOOTH UPHOLSTERY

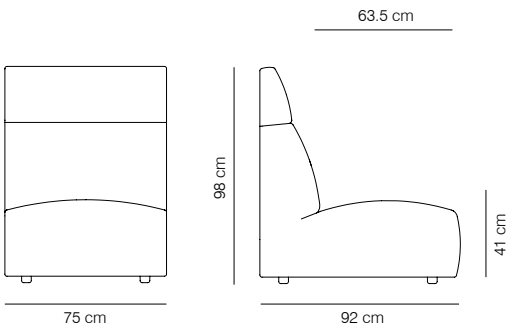

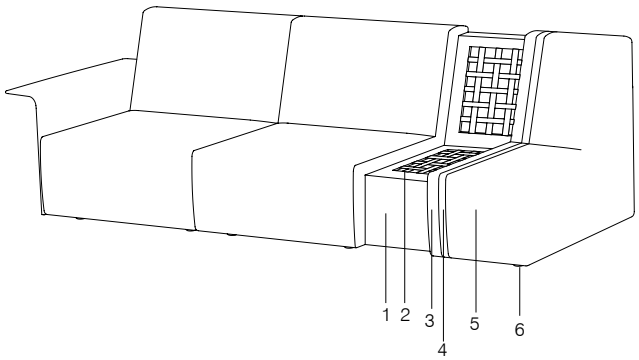

1- Interior structure in steel, solidwood and plywood.
2- Woven seat and back structure.
3- Expanded polyuretane foam in different densities.
4- Polyester fibre covering.
5- Fabric or leather.
6- Height equalising legs.

Needed fabric for material 1.40 m wide:
SISSR: 2.9 m
SISB: 4.4 m
SISM: 4.6 m
SISA: 5.2 m

There is no possible to combine smooth upholstery modules and soft upholstery modules

Sistema

BY LIEVORE ALTHERR MOLINA

CODE	MODEL	PACKAGING	WEIGHT (kg)	FINISHES	PUBLIC PRICE (Fire Re. Foam)	PUBLIC PRICE
SISSR-1	BACKLESS MODULE / SMOOTH UPHOLSTERY	44x97x80 (0.34)	20.7	COM / COL	735 €	714 €
SISSR-2				G2	735 €	714 €
SISSR-3				G3	804 €	781 €
SISSR-4				G4	866 €	840 €
SISSR-5				G5	931 €	904 €
SISB-1	LOW BACK MODULE / SMOOTH UPHOLSTERY	70x97x80 (0.54)	-	COM / COL	1.104 €	1.071 €
SISB-2				G2	1.104 €	1.071 €
SISB-3				G3	1.261 €	1.224 €
SISB-4				G4	1.400 €	1.360 €
SISB-5				G5	1.566 €	1.520 €
SISM-1	MEDIUM BACK MODULE / SMOOTH UPHOLSTERY	80x97x80 (0.62)	30.8	COM / COL	1.117 €	1.085 €
SISM-2				G2	1.117 €	1.085 €
SISM-3				G3	1.278 €	1.241 €
SISM-4				G4	1.386 €	1.345 €
SISM-5				G5	1.525 €	1.481 €
SISA-1	HIGH BACK MODULE / SMOOTH UPHOLSTERY	102x97x80 (0.79)	-	COM / COL	1.244 €	1.208 €
SISA-2				G2	1.244 €	1.208 €
SISA-3				G3	1.413 €	1.372 €
SISA-4				G4	1.579 €	1.533 €
SISA-5				G5	1.748 €	1.697 €

Sistema

BY LIEVORE ALTHERR MOLINA

TABLE OPTIONS

SISMC - WOOD BOX TABLE

Table with a stained European oak plywood or lacquered microtexturized MDF tabletop in the finishes of our collection. Interior plywood cylinder lacquered with the finishes of our collection. With height equalising legs.

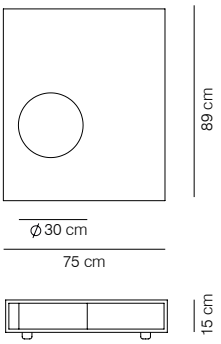

CODE	MODEL	PACKAGING	WEIGHT (kg)	FINISHES				PUBLIC PRICE
SISMCRO	WOOD BOX TABLE	28x97x80 (0.22) x1	21	lacquered cylinder	white, black, grey, sand, tobacco, smoke, silver, red, mustard, green, blue and bronze	outside stained	matt oak	988 €
							cognac, ash and wenge	1.134 €
SISMCTX						outside lacquered	white, black and grey	649 €
							sand, tobacco, smoke and silver	699 €
							red, mustard, green, blue and bronze	748 €
Due to the fact that the wood used is natural, the finish may vary.								

Sistema

BY LIEVORE ALTHERR MOLINA

ARM OPTIONS

SISBRM - WOOD ARM

Curved oak plywood arm, stained with the finishes of our collection.

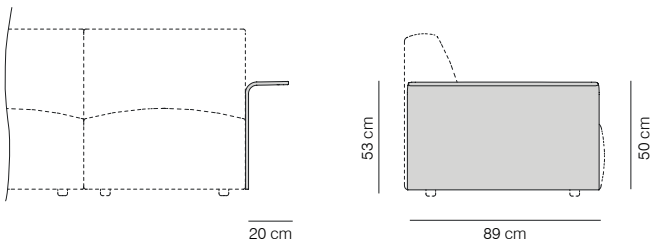

SISBRF - NARROW ARM

Wood structure covered with polyester fibre and non-deformable, expanded polyurethane foam of varying densities. With height equalising legs.

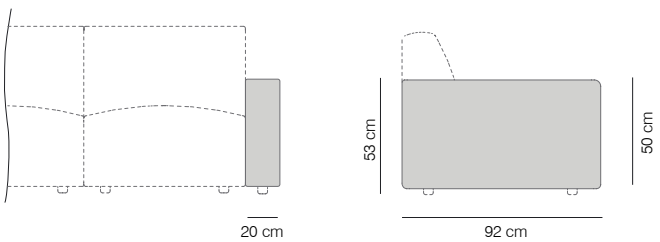

SISBRG - WIDE ARM

Wood structure covered with polyester fibre and non-deformable, expanded polyurethane foam of varying densities. With height equalising legs.

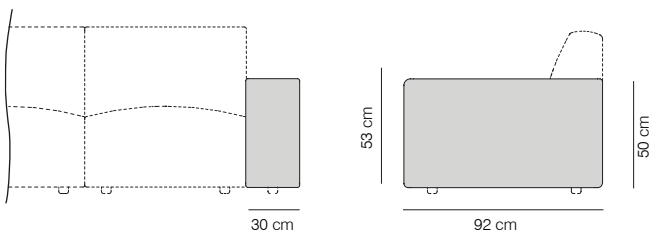

Needed fabric for material 1.40 m wide:
SISBRF: 2.20 m
SISBRG: 2.30 m

CODE	MODEL	PACKAGING	WEIGHT (kg)	FINISHES		PUBLIC PRICE (Fire Re. Foam)	PUBLIC PRICE
SISBRM	WOOD ARM	module included in packing the packing dimensions vary according to the back of the module h(70/80/102) x97x115 cm	-	stained	matt oak, cognac, ash and wenge	-	371 €
SISBRFS-1	NARROW ARM		-	smooth upholstery	COM / COL	283 €	275 €
SISBRFS-2					G2	283 €	275 €
SISBRFS-3					G3	340 €	330 €
SISBRFS-4					G4	409 €	397 €
SISBRFS-5					G5	489 €	475 €
SISBRF-1			-	soft upholstery	COM / COL	325 €	316 €
SISBRF-2					G2	325 €	316 €
SISBRF-3					G3	392 €	381 €
SISBRF-4					G4	470 €	457 €
SISBRF-5					G5	562 €	546 €
SISBRGS-1	WIDE ARM		-	smooth upholstery	COM / COL	324 €	315 €
SISBRGS-2					G2	324 €	315 €
SISBRGS-3					G3	390 €	378 €
SISBRGS-4					G4	467 €	453 €
SISBRGS-5					G5	539 €	524 €
SISBRG-1			-	soft upholstery	COM / COL	373 €	362 €
SISBRG-2					G2	373 €	362 €
SISBRG-3					G3	449 €	436 €
SISBRG-4					G4	537 €	521 €
SISBRG-5					G5	621 €	603 €

Due to the fact that the wood used is natural, the finish may vary.

Sistema

BY LIEVORE ALTHERR MOLINA

POUFS - SOFT UPHOLSTERY

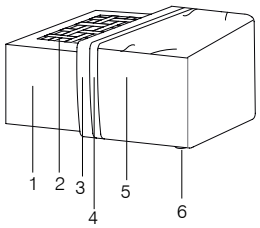

Upholstered modules that allow angular or straight compositions.

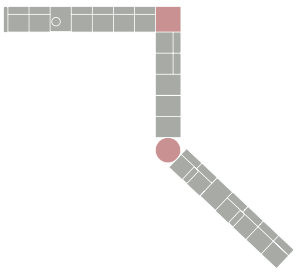

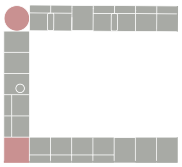

1- Interior structure in solid wood.
2- Woven seat.
3- Expanded polyuretane foam in different densities.
4- Polyester fibre covering with down filling.
5- Fabric or leather.
6- Height equalising legs.

Needed fabric for material 1.4 m wide:
SISPORS: 4.15 m
SISPOCS: 2.6 m

SISPORS - ROUND POUF / SOFT UPHOLSTERY

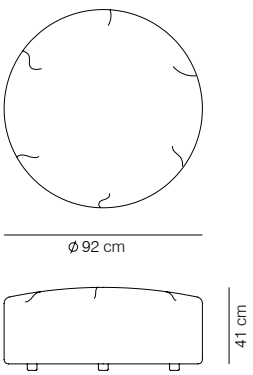

SISPOCS - SQUARE POUF / SOFT UPHOLSTERY

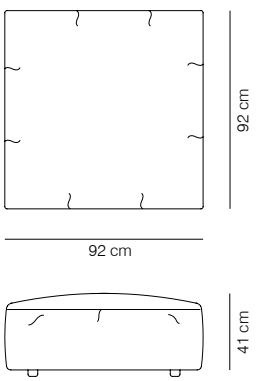

Fabrics offered for soft upholstery:

viccarbe
VULCANO, GAUDI, MATISS, SHADOW, SIENA, LIDO, REGIO, FACET, SHABBY, GUBBIO, RICO, VELOURS CAVIAR and SERA.

kvadrat
FIELD, MESSENGER, TONUS 4, CLARA, DIVINA, DIVINA MELAGNE and HALLINGDAL 65.

camira
FIGHTER, STEP, STEP MELAGNE, FAME and EUROPOST 2.

Gabriel
ADVANTAGE, CHEATEAU PLUS, CITAEL, XTREME PLUS, LUCIA, AQUARIUS, MAIN LINE PLUS, BLAZER 1 and BLAZER 2.

CODE	MODEL	PACKAGING	WEIGHT (kg)	FINISHES	PUBLIC PRICE (Fire Re. Foam)	PUBLIC PRICE
SISPORS-1	ROUND POUF / SOFT UPHOLSTERY	43x96x96 (0.40) x1	-	COM / COL	904 €	878 €
SISPORS-2				G2	904 €	878 €
SISPORS-3				G3	990 €	961 €
SISPORS-4				G4	1.066 €	1.035 €
SISPORS-5				G5	1.147 €	1.113 €
SISPOCS-1	SQUARE POUF / SOFT UPHOLSTERY	43x96x96 (0.40) x1	31.4	COM / COL	850 €	825 €
SISPOCS-2				G2	850 €	825 €
SISPOCS-3				G3	929 €	902 €
SISPOCS-4				G4	999 €	970 €
SISPOCS-5				G5	1.075 €	1.044 €

Sistema

BY LIEVORE ALTHERR MOLINA

POUFS - SMOOTH UPHOLSTERY

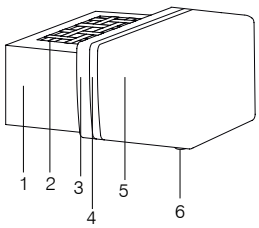

Upholstered modules that allow angular or straight compositions.

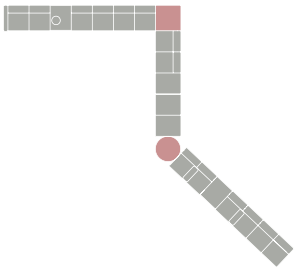

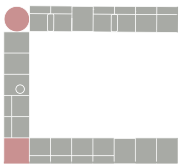

1- Interior structure in solid wood.
2- Woven seat.
3- Expanded polyuretane foam in different densities.
4- Polyester fibre covering.
5- Fabric or leather.
6- Height equalising legs.

Needed fabric for material 1.40 m wide:
SISPOR: 4.15 m
SISPOC: 2.6 m

SISPOR - ROUND POUF / SMOOTH UPHOLSTERY

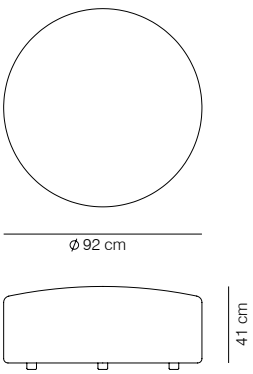

SISPOC - SQUARE POUF / SMOOTH UPHOLSTERY

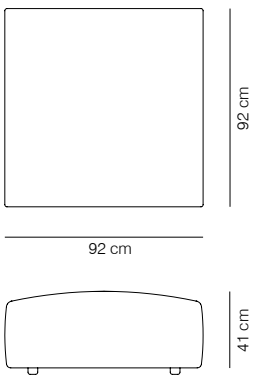

CODE	MODEL	PACKAGING	WEIGHT (kg)	FINISHES	PUBLIC PRICE (Fire Re. Foam)	PUBLIC PRICE
SISPOR-1	ROUND POUF / SMOOTH UPHOLSTERY	43x96x96 (0.40) x1	-	COM / COL	786 €	763 €
SISPOR-2				G2	786 €	763 €
SISPOR-3				G3	861 €	836 €
SISPOR-4				G4	927 €	900 €
SISPOR-5				G5	997 €	968 €
SISPOC-1	SQUARE POUF / SMOOTH UPHOLSTERY	43x96x96 (0.40) x1	31.4	COM / COL	739 €	717 €
SISPOC-2				G2	739 €	717 €
SISPOC-3				G3	808 €	784 €
SISPOC-4				G4	869 €	844 €
SISPOC-5				G5	935 €	908 €

Sistema

BY LIEVORE ALTHERR MOLINA

ACCESORIES

Needed fabric for material 1.40 m wide:
SISBRA: 0.85 m
SISRE: 0.7 m

SISMA - FREE TABLE

Table with a stained European oak plywood or lacquered microtexturized MDF tabletop in the finishes of our collection.

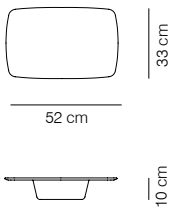

SISBRA - FREE ARM

Upholstered armrest with MDF structure, lacquered in black with expanded nondeformable polyurethane foam, of different densities and polyester fibre.

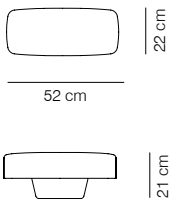

CUSHION

Cushions of soft virgin fibre with anti-acarus treatment.

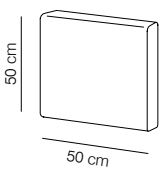

SISRE - HEADREST

Accessorie that adapt perfectly to the form of the armchair and enhance comfort for situations when prolonged rest is needed. It requires no installation and is available for the high armchair in all the fabrics of our collection. Only available for modules with high backs.

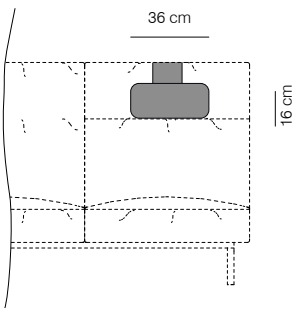

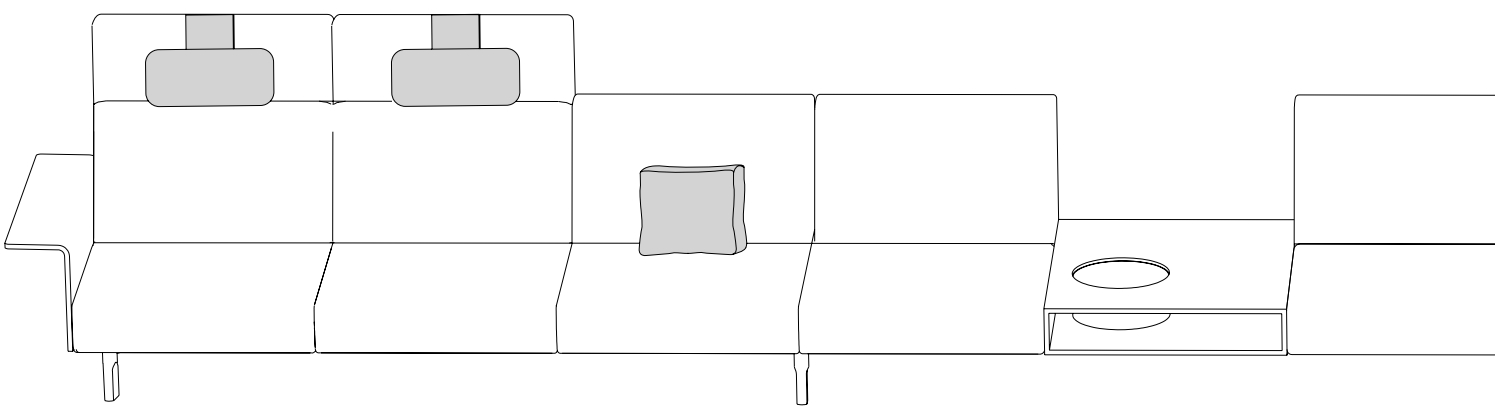

Sistema

BY LIEVORE ALTHERR MOLINA

CODE	MODEL	PACKAGING	WEIGHT (kg)	FINISHES		PUBLIC PRICE (Fire Re. Foam)	PUBLIC PRICE
SISMARO	FREE TABLE	60x40x16 (0.04) x1	2.8	stained	matt oak, cognac, ash and wenge	-	325 €
SISMATX				lacquered	white, black and grey	-	211 €
					sand, tobacco, smoke and silver	-	227 €
					red, mustard, green, blue and bronze	-	243 €
SISBRA-1	FREE ARM	52x26x22 (0.03) x1	2.6	upholstered	COM / COL	472 €	459 €
SISBRA-2					G2	472 €	459 €
SISBRA-3					G3	496 €	482 €
SISBRA-4					G4	522 €	507 €
SISBRA-5					G5	546 €	530 €
SISAL-1	CUSHION	Included on the module	-	upholstered	COM / COL	-	73 €
SISAL-2					G2	-	73 €
SISAL-3					G3	-	100 €
SISAL-4					G4	-	154 €
SISAL-5					G5	-	180 €
SISRE-1	HEADREST	Included on the module	0.8	upholstered	COM / COL	-	100 €
SISRE-2					G2	-	100 €
SISRE-3					G3	-	136 €
SISRE-4					G4	-	160 €
SISRE-5					G5	-	186 €

Due to the fact that the wood used is natural, the finish may vary.

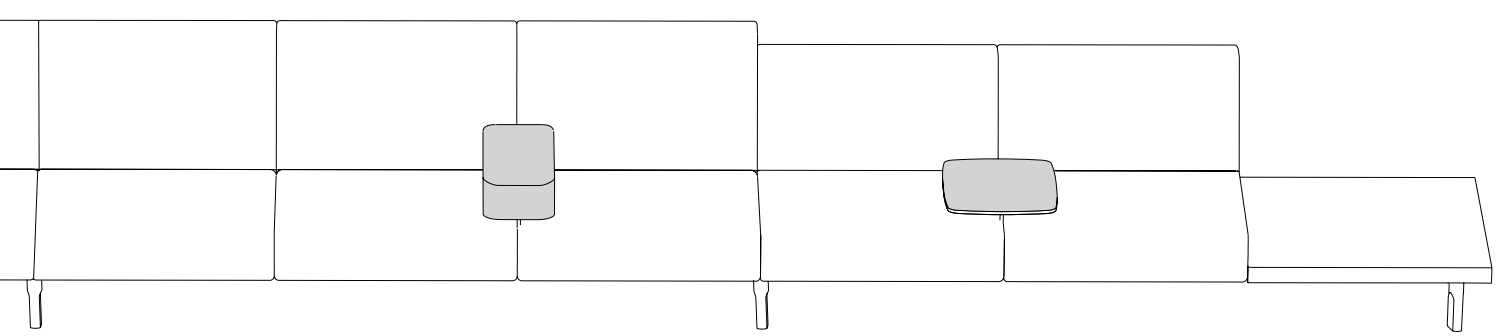

Sistema

BY LIEVORE ALTHERR MOLINA

SUGGESTIONS

The prices of the compositions shown below are valid for legs in white or black, and wooden elements finished in matt oak.

COMPOSITION 1

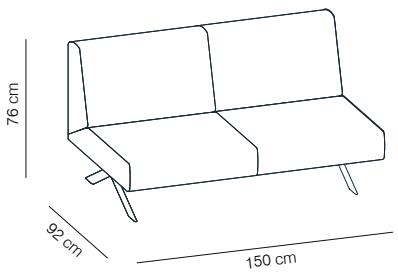

MODEL	FINISHES	PUBLIC PRICE (Fire Re. Foam)	PUBLIC PRICE
COMPOSITION 1	COM / COL	2.770 €	2.699 €
	G2	2.770 €	2.699 €
	G3	3.034 €	2.957 €
	G4	3.280 €	3.194 €
	G5	3.528 €	3.436 €

Components: 2 pcs. SISMP, 2 pcs. SISPTI.

COMPOSITION 2

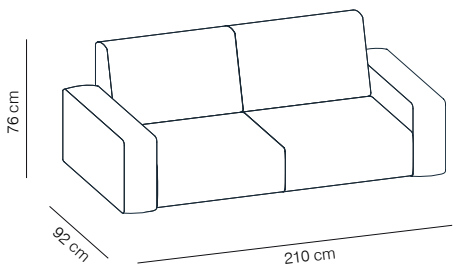

MODEL	FINISHES	PUBLIC PRICE (Fire Re. Foam)	PUBLIC PRICE
COMPOSITION 2	COM / COL	2.884 €	2.801 €
	G2	2.884 €	2.801 €
	G3	3.340 €	3.243 €
	G4	3.712 €	3.604 €
	G5	4.174 €	4.052 €

Components: 2 pcs. SISM, 2 pcs. SISBRG.

COMPOSITION 3

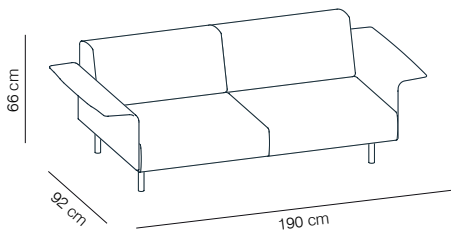

MODEL	FINISHES	PUBLIC PRICE (Fire Re. Foam)	PUBLIC PRICE
COMPOSITION 3	COM / COL	3.100 €	3.032 €
	G2	3.100 €	3.032 €
	G3	3.358 €	3.282 €
	G4	3.608 €	3.524 €
	G5	3.860 €	3.769 €

Components: 2 pcs. SISBP, 2 pcs. SISPFL, 2 pcs. SISBRMP.

Sistema

BY LIEVORE ALTHERR MOLINA

SUGGESTIONS

COMPOSITION 4

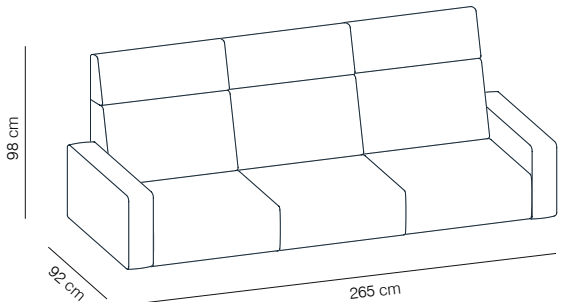

MODEL	FINISHES	PUBLIC PRICE (Fire Re. Foam)	PUBLIC PRICE
COMPOSITION 4	COM / COL	4.298 €	4.173 €
	G2	4.298 €	4.173 €
	G3	4.919 €	4.775 €
	G4	5.555 €	5.394 €
	G5	6.222 €	6.042 €

Components: 3 pcs. SISA, 2 pcs. SISBRF

COMPOSITION 5

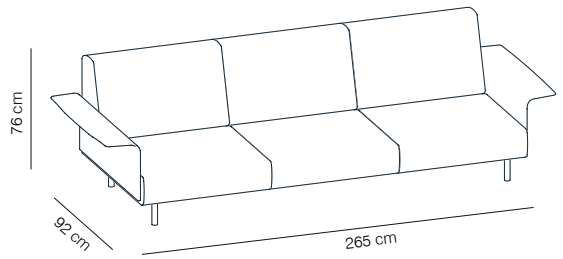

MODEL	FINISHES	PUBLIC PRICE (Fire Re. Foam)	PUBLIC PRICE
COMPOSITION 5	COM / COL	4.322 €	4.216 €
	G2	4.322 €	4.216 €
	G3	4.718 €	4.602 €
	G4	5.087 €	4.959 €
	G5	5.459 €	5.322 €

Components: 3 pcs. SISMP, 2 uds SISBRMP, 2 pcs. SISPMET.

COMPOSITION 6

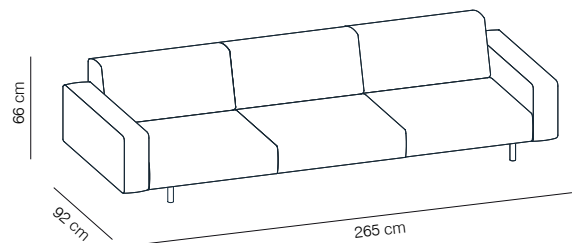

MODEL	FINISHES	PUBLIC PRICE (Fire Re. Foam)	PUBLIC PRICE
COMPOSITION 6	COM / COL	4.230 €	4.111 €
	G2	4.230 €	4.111 €
	G3	4.733 €	4.599 €
	G4	5.242 €	5.092 €
	G5	5.780 €	5.614 €

Components: 3 pcs. SISBP, 2 pcs. SISBRFP, 2 pcs. SISPMET.

Sistema

BY LIEVORE ALTHERR MOLINA

SUGGESTIONS

COMPOSITION 7

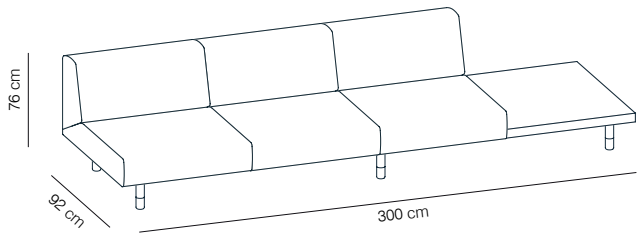

MODEL	FINISHES	PUBLIC PRICE (Fire Re. Foam)	PUBLIC PRICE
COMPOSITION 7	COM / COL	4.222 €	4.120 €
	G2	4.222 €	4.120 €
	G3	4.609 €	4.496 €
	G4	4.984 €	4.859 €
	G5	5.362 €	5.225 €

Components: 3 pcs. SISBP, 1 pc. SISMB, 3 pcs. SISPRO.

COMPOSITION 8

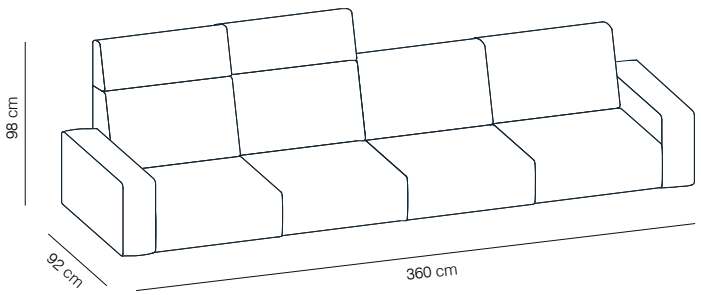

MODEL	FINISHES	PUBLIC PRICE (Fire Re. Foam)	PUBLIC PRICE
COMPOSITION 8	COM / COL	5.372 €	5.216 €
	G2	5.372 €	5.216 €
	G3	6.166 €	5.986 €
	G4	6.870 €	6.670 €
	G5	7.670 €	7.447 €

Components: 2 pcs. SISA, 2 pcs. SISM, 2 pcs. SISBRG.

COMPOSITION 9

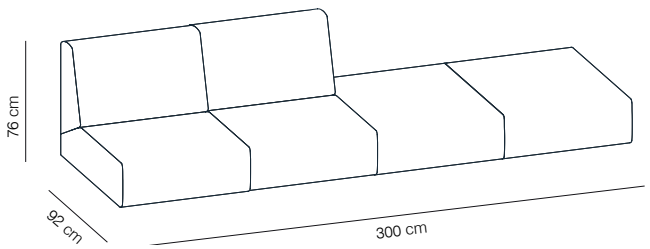

MODEL	FINISHES	PUBLIC PRICE (Fire Re. Foam)	PUBLIC PRICE
COMPOSITION 9	COM / COL	3.704 €	3.597 €
	G2	3.704 €	3.597 €
	G3	4.164 €	4.044 €
	G4	4.504 €	4.371 €
	G5	4.912 €	4.770 €

Components: 2 pcs. SISM, 2 pcs. SISSR.

SUGGESTIONS

COMPOSITION 10

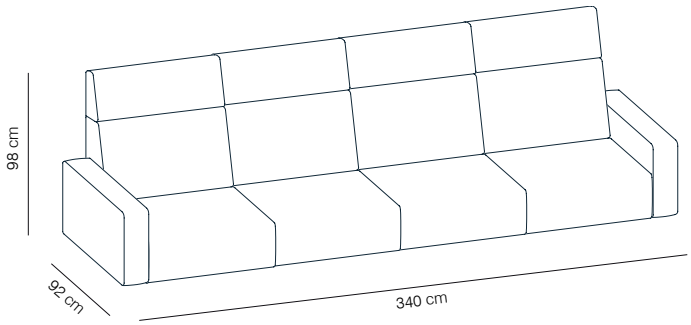

MODEL	FINISHES	PUBLIC PRICE (Fire Re. Foam)	PUBLIC PRICE
COMPOSITION 10	COM / COL	5.542 €	5.381 €
	G2	5.542 €	5.381 €
	G3	6.332 €	6.147 €
	G4	7.134 €	6.928 €
	G5	7.970 €	7.740 €

Components: 4 pcs. SISA, 2 pcs. SISBRF.

COMPOSITION 11

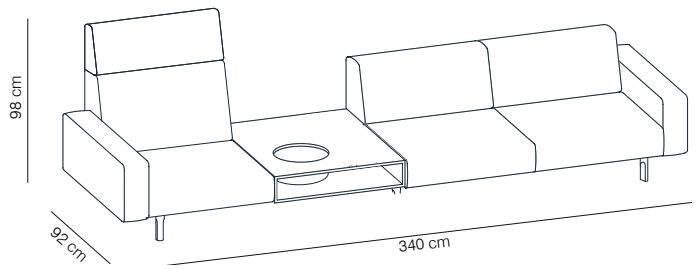

MODEL	FINISHES	PUBLIC PRICE (Fire Re. Foam)	PUBLIC PRICE
COMPOSITION 11	COM / COL	5.762 €	5.638 €
	G2	5.762 €	5.638 €
	G3	6.295 €	6.156 €
	G4	6.824 €	6.667 €
	G5	7.385 €	7.214 €

Components: 1 pc. SISAP, 1 pc. SISMCP, 2 pcs. SISMP, 2 pcs. SISBRFP, 3 pcs. SISPFL.

COMPOSITION 12

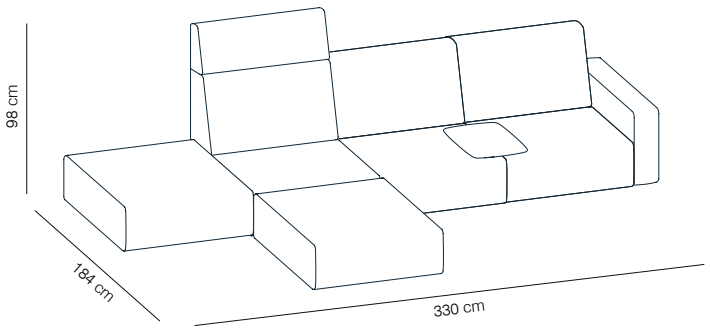

MODEL	FINISHES	PUBLIC PRICE (Fire Re. Foam)	PUBLIC PRICE
COMPOSITION 12	COM / COL	5.884 €	5.732 €
	G2	5.884 €	5.732 €
	G3	6.570 €	6.398 €
	G4	7.144 €	6.954 €
	G5	7.802 €	7.594 €

Components: 1 pc. SISPOC, 1 pc. SISSR, 1 pc. SISA, 2 pcs. SISM, 1 pc. SISBRF, 1 pc. SISMA.

Sistema

BY LIEVORE ALTHERR MOLINA

SUGGESTIONS

COMPOSITION 13

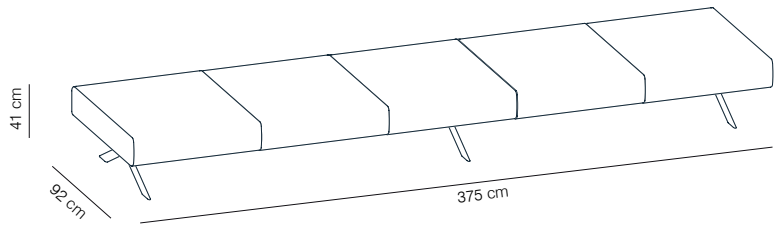

MODEL	FINISHES	PUBLIC PRICE (Fire Re. Foam)	PUBLIC PRICE
COMPOSITION 13	COM / COL	4.651 €	4.532 €
	G2	4.651 €	4.532 €
	G3	4.961 €	4.835 €
	G4	5.241 €	5.104 €
	G5	5.536 €	5.390 €

Components: 5 pcs. SISSRP, 3 pcs. SISPTI.

COMPOSITION 14

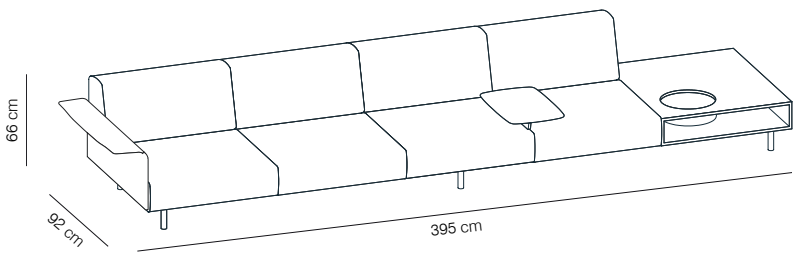

MODEL	FINISHES	PUBLIC PRICE (Fire Re. Foam)	PUBLIC PRICE
COMPOSITION 14	COM / COL	5.234 €	5.096 €
	G2	5.234 €	5.096 €
	G3	5.750 €	5.598 €
	G4	6.250 €	6.082 €
	G5	6.754 €	6.570 €

Components: 4 pcs. SISBP, 1 pc. SISMCP, 1 pc. SISBRMP, 1 pc. SISMA, 3 pcs. SISPMET.

COMPOSITION 15

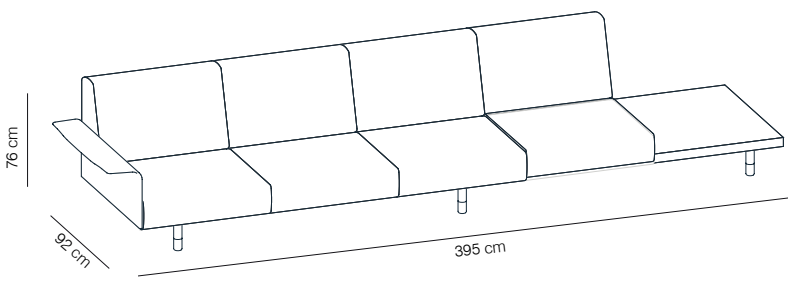

MODEL	FINISHES	PUBLIC PRICE (Fire Re. Foam)	PUBLIC PRICE
COMPOSITION 15	COM / COL	6.102 €	5.961 €
	G2	6.102 €	5.961 €
	G3	6.630 €	6.476 €
	G4	7.122 €	6.951 €
	G5	7.618 €	7.435 €

Components: 4 pcs. SISMP, 1 pc. SISMB, 1 pc. SISBRMP, 3 pcs. SISPRO.

SUGGESTIONS

COMPOSITION 16

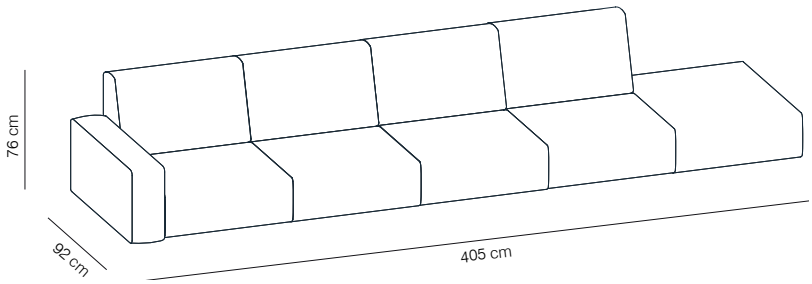

MODEL	FINISHES	PUBLIC PRICE (Fire Re. Foam)	PUBLIC PRICE
COMPOSITION 16	COM / COL	5.528 €	5.368 €
	G2	5.528 €	5.368 €
	G3	6.308 €	6.125 €
	G4	6.880 €	6.678 €
	G5	7.593 €	7.372 €

Components: 4 pcs. SISM, 1 pc. SISSR, 1 pc. SISBRG.

COMPOSITION 17

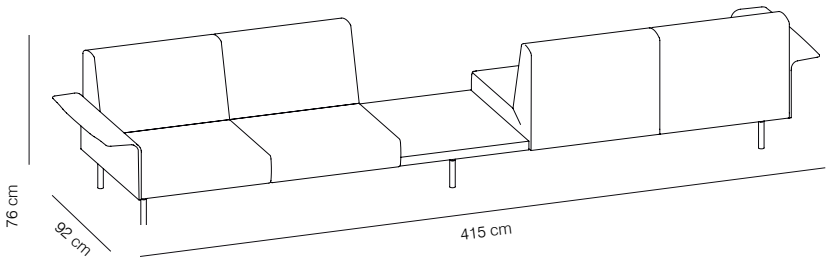

MODEL	FINISHES	PUBLIC PRICE (Fire Re. Foam)	PUBLIC PRICE
COMPOSITION 17	COM / COL	6.075 €	5.933 €
	G2	6.075 €	5.933 €
	G3	6.603 €	6.448 €
	G4	7.095 €	6.923 €
	G5	7.591 €	7.407 €

Components: 4 pcs. SISMP, 1 pc. SISMB, 2 pcs. SISBRMP, 3 pcs. SISPMET.

COMPOSITION 18

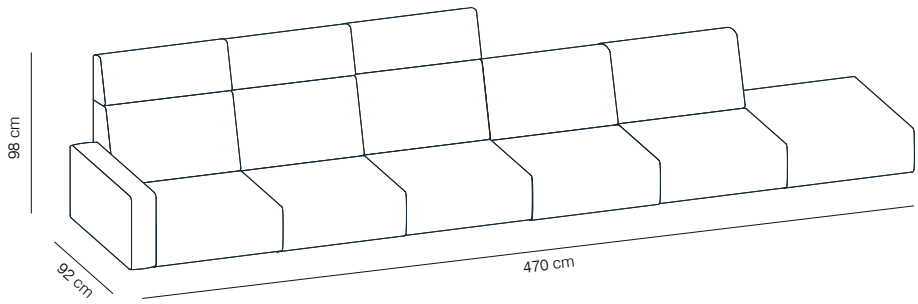

MODEL	FINISHES	PUBLIC PRICE (Fire Re. Foam)	PUBLIC PRICE
COMPOSITION 18	COM / COL	6.984 €	6.782 €
	G2	6.984 €	6.782 €
	G3	7.939 €	7.708 €
	G4	8.784 €	8.528 €
	G5	9.714 €	9.433 €

Components: 3 pcs. SISA, 2 pcs. SISM, 1 pc. SISSR, 1 pc. SISBRF.

Sistema

BY LIEVORE ALTHERR MOLINA

SUGGESTIONS

COMPOSITION 19

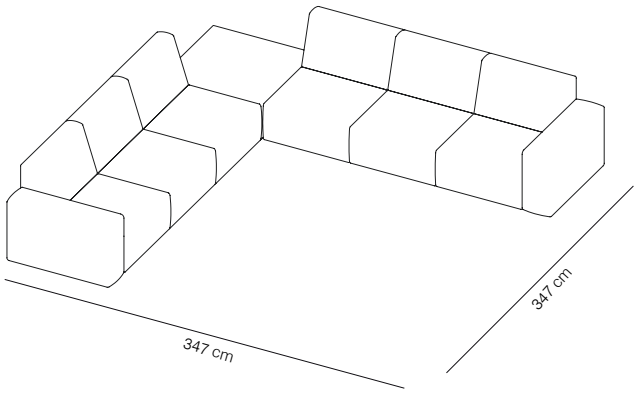

MODEL	FINISHES	PUBLIC PRICE (Fire Re. Foam)	PUBLIC PRICE
COMPOSITION 19	COM / COL	8.091 €	7.856 €
	G2	8.091 €	7.856 €
	G3	9.260 €	8.990 €
	G4	10.125 €	9.829 €
	G5	11.209 €	10.882 €

Components: 6 pcs. SISM, 1 pc. SISPOC, 2 pcs. SISBRG.

COMPOSITION 20

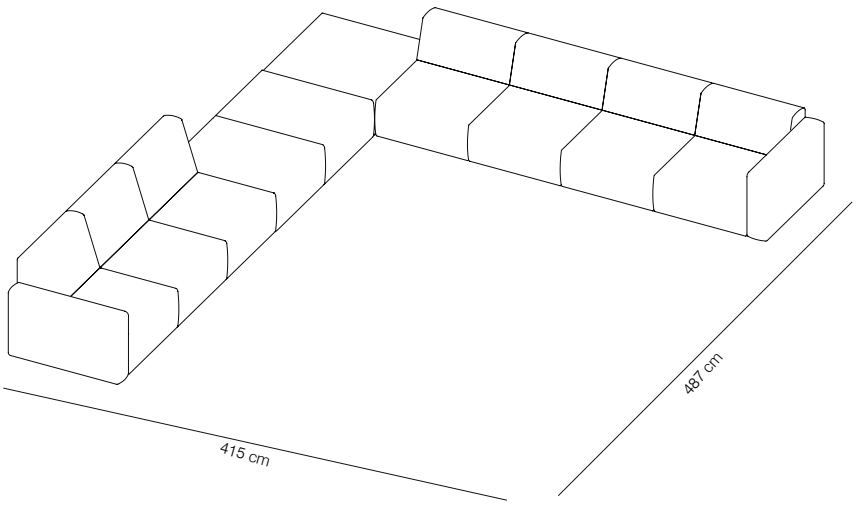

MODEL	FINISHES	PUBLIC PRICE (Fire Re. Foam)	PUBLIC PRICE
COMPOSITION 20	COM / COL	10.542 €	10.234 €
	G2	10.542 €	10.234 €
	G3	11.974 €	11.626 €
	G4	13.177 €	12.793 €
	G5	14.614 €	14.189 €

Components: 3 pcs. SISM, 2 pcs. SISSR, 1 pc. SISPOC, 4 pcs. SISB, 2 pcs. SISBRF.

COMPOSITION 21

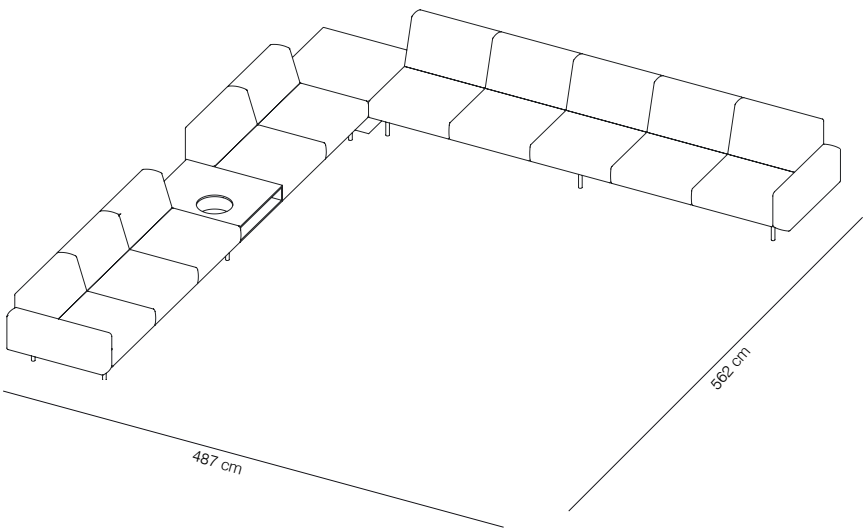

MODEL	FINISHES	PUBLIC PRICE (Fire Re. Foam)	PUBLIC PRICE
COMPOSITION 21	COM / COL	14.539 €	14.153 €
	G2	14.539 €	14.153 €
	G3	16.029 €	15.602 €
	G4	17.464 €	16.991 €
	G5	18.940 €	18.426 €

Components: 4 pcs. SISBP, 1 pc. SISMCP, 1 pc. SISPOC, 5 pcs. SISMP, 2 pcs. SISBRF, 6 pcs. SISPMET.

Season Sofa

BY PIERO LISSONI

Season Sofa

BY PIERO LISSONI

SEASON SOFA is a simple and elegant upholstered modular sofa. The collection is composed by different modules, which makes it very easy to create different compositions for waiting areas and living rooms, in a very intuitive way.

The fixed upholstery is available in fabric and leather, to choose from a variety of colors that can be combined with other items of the collection. The base of the SEASON sofa has a grey protection of washable technical fabric.

Perfect for offices, restaurants, receptions, etc.

The tolerance in the measurements of the upholstered elements can be of +/- 3 cm.

A sketch must be included with your order to avoid any sort of misunderstanding. Remember that “right” and “left” are understood to be from the perspective of a person looking at the object from the front. The more information you include with your order, the lower the possibility of error.

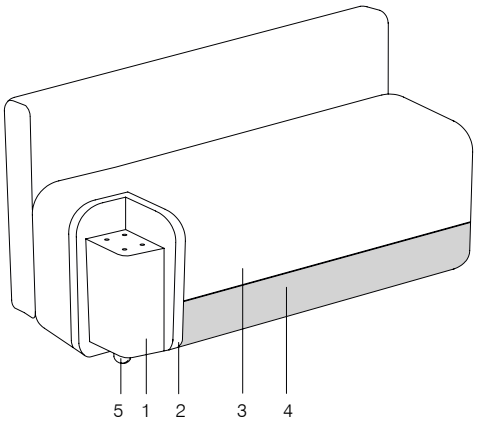

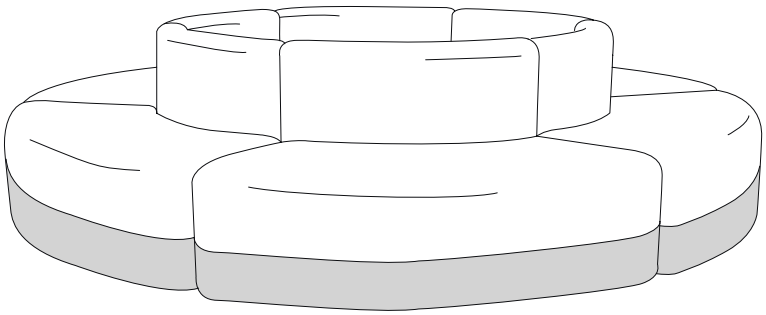

1- Interior structure in solid wood and perfored top of microparticles low in formaldehyde.
We use PEFC certified wood.
2- Expanded polyurethane foam in different densities.
3- Fabric or leather.
4- Upholstery protection (technical fabric, grey).
5- Height equalising legs.

Test Certificates: UNE EN 16139:13 and ANSI BIFMA X5.4:2012.

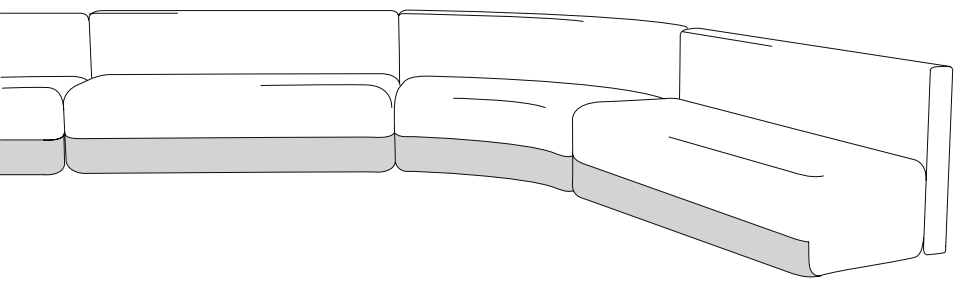

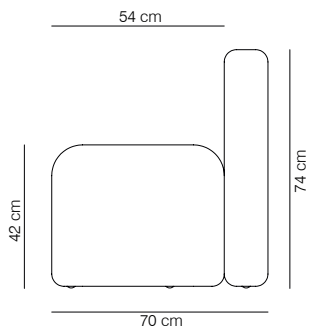

Season Sofa

BY PIERO LISSONI

Needed fabric for material 1.40m wide:
SESA: 5.55 m
SESB: 5.70 m
SESC: 5.40 m

SESA - MODEL A - STRAIGHT

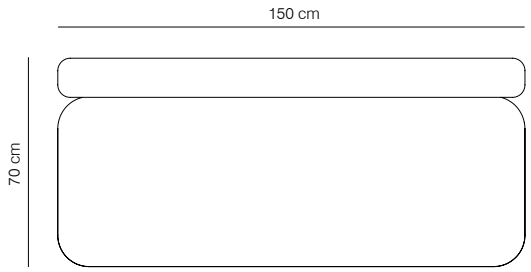

CODE	MODEL	PACKAGING	WEIGHT (kg)	FINISHES	PUBLIC PRICE (Fire Re. Foam)	PUBLIC PRICE
SESA-1	MODEL A STRAIGHT	152x85x79 (1.02) x1	48	COM / COL	1.492 €	1.449 €
SESA-2				G2	1.492 €	1.449 €
SESA-3				G3	1.800 €	1.748 €
SESA-4				G4	2.108 €	2.047 €
SESA-5				G5	2.416 €	2.346 €

OPTIONS FOR FINISHES:

- UPHOLSTERY PROTECTION: Technical fabric colour grey.

SESB - MODEL B - CLOSED

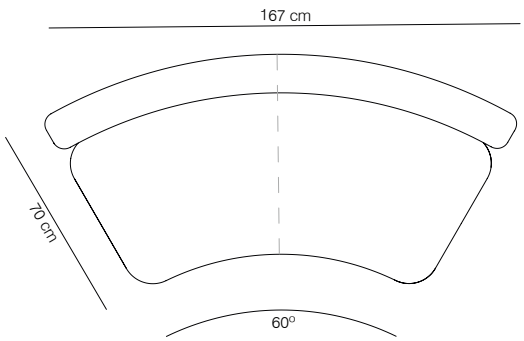

CODE	MODEL	PACKAGING	WEIGHT (kg)	FINISHES	PUBLIC PRICE (Fire Re. Foam)	PUBLIC PRICE
SESB-1	MODEL B CLOSED	174x85x79 (1.16) x1	51	COM / COL	1.789 €	1.737 €
SESB-2				G2	1.789 €	1.737 €
SESB-3				G3	2.085 €	2.024 €
SESB-4				G4	2.381 €	2.312 €
SESB-5				G5	2.677 €	2.599 €

OPTIONS FOR FINISHES:

- UPHOLSTERY PROTECTION: Technical fabric colour grey.

SESC - MODEL C - OPEN

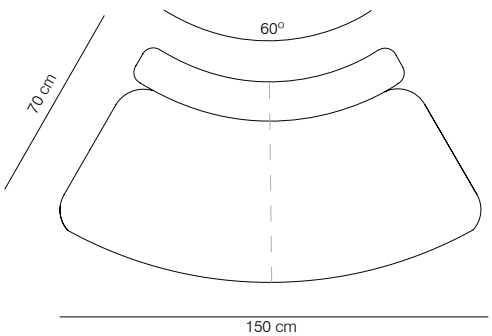

CODE	MODEL	PACKAGING	WEIGHT (kg)	FINISHES	PUBLIC PRICE (Fire Re. Foam)	PUBLIC PRICE
SESC-1	MODEL C OPEN	154x85x79 (1.03) x1	42	COM / COL	1.718 €	1.668 €
SESC-2				G2	1.718 €	1.668 €
SESC-3				G3	1.978 €	1.921 €
SESC-4				G4	2.239 €	2.174 €
SESC-5				G5	2.511 €	2.438 €

OPTIONS FOR FINISHES:

- UPHOLSTERY PROTECTION: Technical fabric colour grey.

Season Sofa

BY PIERO LISSONI

SUGGESTIONS

COMPOSITION 1

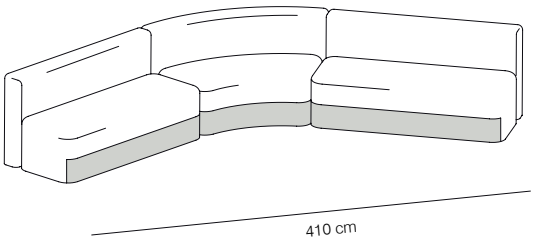

MODEL	FINISHES	PUBLIC PRICE (Fire Re. Foam)	PUBLIC PRICE
COMPOSITION 1	COM / COL	4.773 €	4.635 €
	G2	4.773 €	4.635 €
	G3	5.685 €	5.520 €
	G4	6.597 €	6.406 €
	G5	7.509 €	7.291 €

Components: 1 pc. SESB, 2 pcs. SESA.

COMPOSITION 2

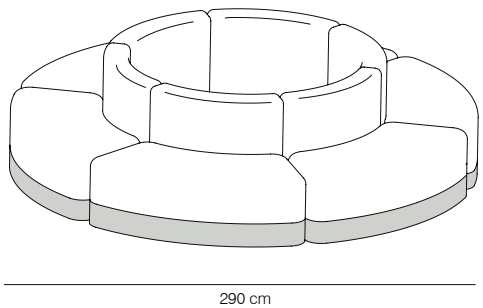

MODEL	FINISHES	PUBLIC PRICE (Fire Re. Foam)	PUBLIC PRICE
COMPOSITION 2	COM / COL	10.308 €	10.005 €
	G2	10.308 €	10.005 €
	G3	11.868 €	11.523 €
	G4	13.434 €	13.041 €
	G5	15.066 €	14.628 €

Components: 6 pcs. SESC.

COMPOSITION 3

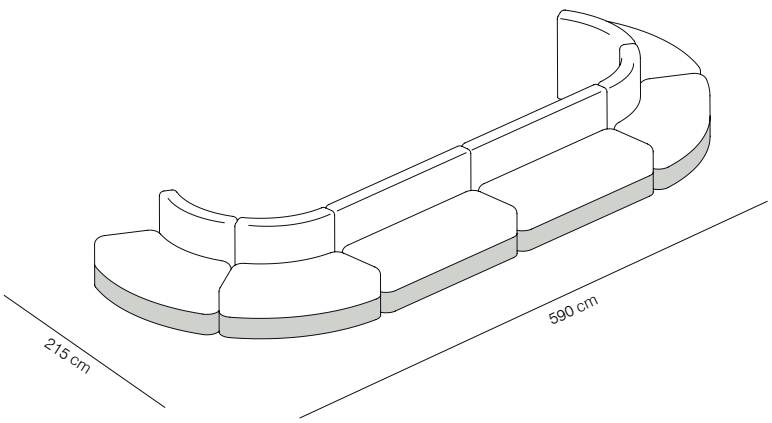

MODEL	FINISHES	PUBLIC PRICE (Fire Re. Foam)	PUBLIC PRICE
COMPOSITION 3	COM / COL	9.856 €	9.568 €
	G2	9.856 €	9.568 €
	G3	11.512 €	11.178 €
	G4	13.172 €	12.788 €
	G5	14.876 €	14.444 €

Components: 4 pcs. SESC, 2 pcs. SESA.

Season Sofa

BY PIERO LISSONI

SUGGESTIONS

COMPOSITION 4

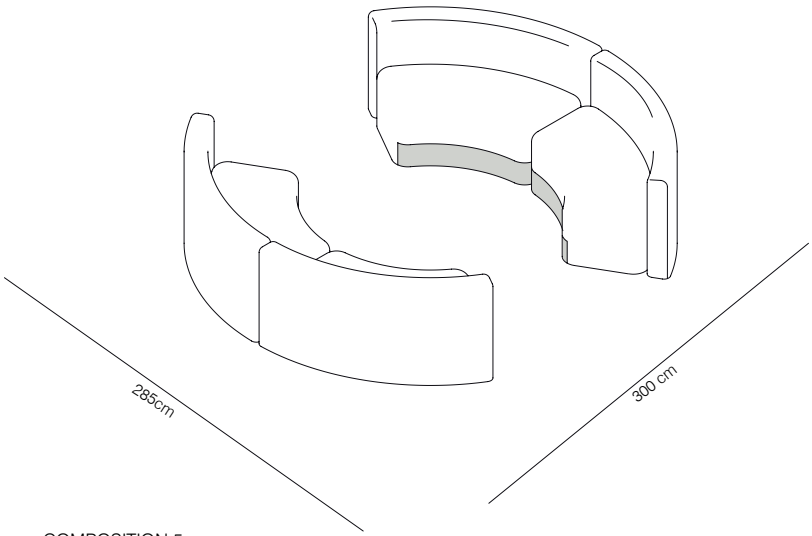

MODEL	FINISHES	PUBLIC PRICE (Fire Re. Foam)	PUBLIC PRICE
COMPOSITION 4	COM / COL	7.156 €	6.946 €
	G2	7.156 €	6.946 €
	G3	8.340 €	8.096 €
	G4	9.524 €	9.246 €
	G5	10.708 €	10.396 €

Components: 4 pcs. SESB.

COMPOSITION 5

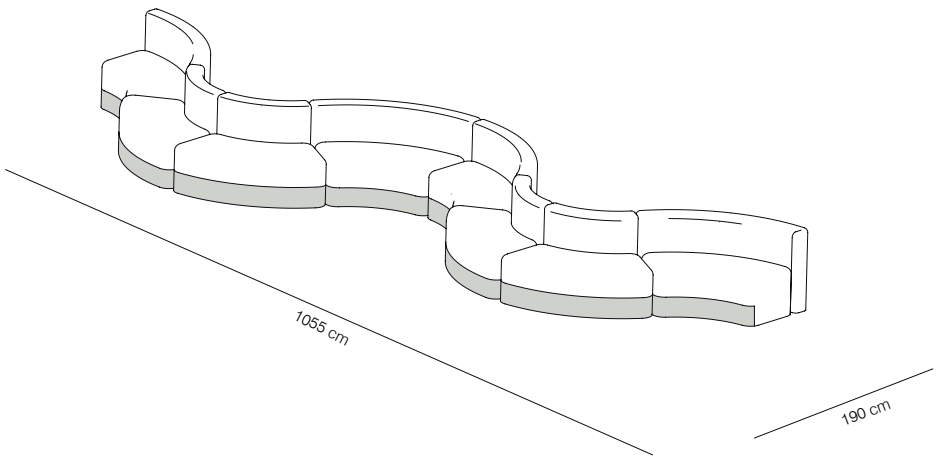

MODEL	FINISHES	PUBLIC PRICE (Fire Re. Foam)	PUBLIC PRICE
COMPOSITION 5	COM / COL	14.028 €	13.616 €
	G2	14.028 €	13.616 €
	G3	16.252 €	15.778 €
	G4	18.480 €	17.940 €
	G5	20.752 €	20.148 €

Components: 4 pcs. SESB, 4 pcs. SESC.

COMPOSITION 6

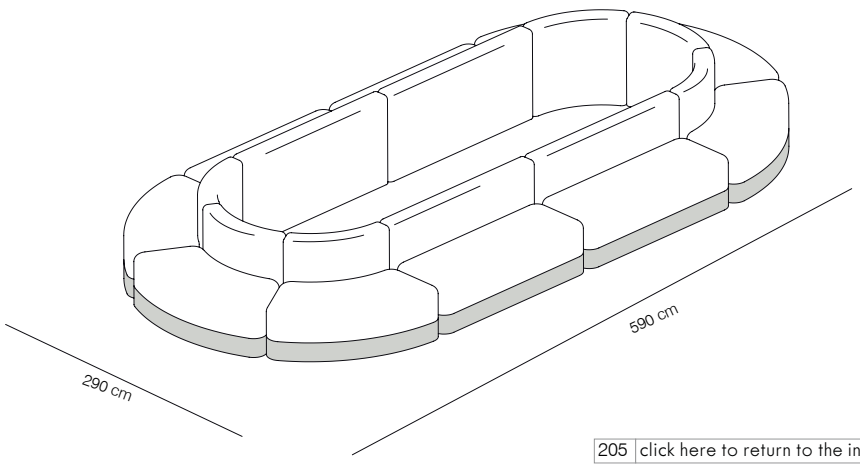

MODEL	FINISHES	PUBLIC PRICE (Fire Re. Foam)	PUBLIC PRICE
COMPOSITION 6	COM / COL	16.276 €	15.801 €
	G2	16.276 €	15.801 €
	G3	19.068 €	18.515 €
	G4	21.866 €	21.229 €
	G5	24.730 €	24.012 €

Components: 4 pcs. SESA, 6 pcs. SESC.

Platform

BY ARIK LEVY

Platform

BY ARIK LEVY

CONSULT AVAILABILITY

Platform is a collection of seating and benches that allows for a wide variety of compositions by combining backs and sides of different heights.
The backs can be ordered individually to configure different options, but the sides are only provided along with the backs, as they are joined together.

The sofa is designed to provide excellent comfort without the need for any kind of cushion, just as it is shown in the images, but any of the items in the PILLOWS collection from Odosdesign would make a perfect complement..

The tolerance of the different elements can be +/- 3 cm.

Test Certificate: UNE EN 16139:13.

A sketch must be included with your order to avoid any sort of misunderstanding. Remember that “right” and “left” are understood to be from the perspective of a person looking at the object from the front. The more information you include with your order, the lower the possibility of error.

Not produced in leather.

The product has been discontinued of our collection, but sofas will continue to be delivered while stocks last. Consult the sales team.

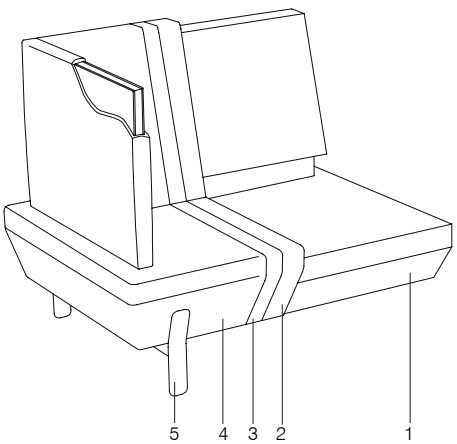

1- Interior structure of arms, back and seat in solid wood and lacquered steel. We use PEFC certified wood.
2- Expanded polyurethane foam in different densities.
3- Polyester fibre covering.
4- Fabric.
5- Legs in calibrated powder coated steel tube in thermoreinforced polyester in black, white and fluorescent orange.

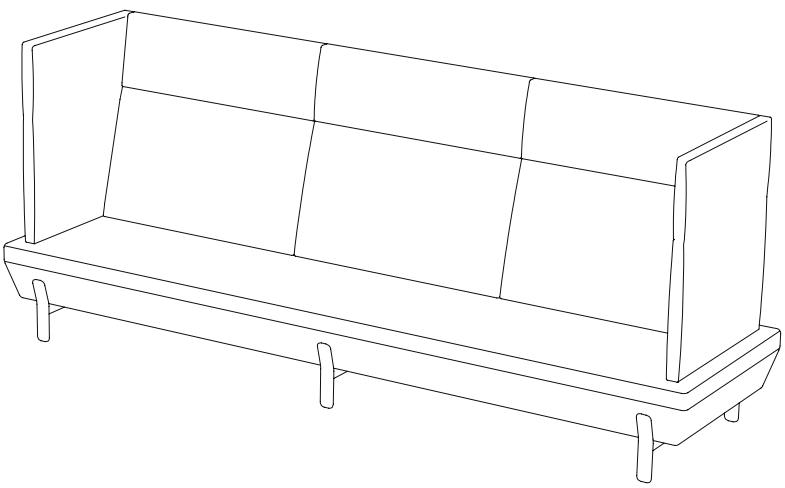

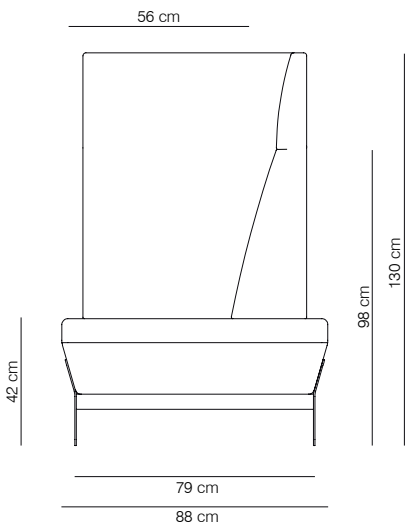

Needed fabric for material 1.40 m wide:

PLA88: 2.7m	PLALB: 2.3m
PLA124: 2.7m	PLAHB: 3.6m
PLA 224: 4.8m	PLALS: 1.7m
PLA324: 7.1m	PLAHS: 2.7m

Platform

BY ARIK LEVY

CONSULT AVAILABILITY

SINGLE UNITS TO HELP WITH THE BUDGET

PLA88 - POUF

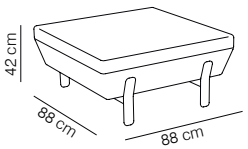

CODE	MODEL	PACKAGING	WEIGHT (kg)	FINISHES	PUBLIC PRICE (Fire Re. Foam)		PUBLIC PRICE	
					FLUORESCENT BASE	WHITE/BLACK BASE	FLUORESCENT BASE	WHITE/BLACK BASE
PLA88-1	POUF	93x93x32 (0.28) (x2) 90x31x8 (0.02) x3	27	COM / COL	961 €	801 €	933 €	777 €
PLA88-2				G2	961 €	801 €	933 €	777 €
PLA88-3				G3	1.161 €	968 €	1.127 €	940 €
PLA88-4				G4	1.386 €	1.155 €	1.346 €	1.121 €
PLA88-5				G5	1.636 €	1.363 €	1.588 €	1.324 €

PLA124 - 1 SEAT

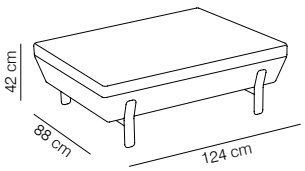

CODE	MODEL	PACKAGING	WEIGHT (kg)	FINISHES	PUBLIC PRICE (Fire Re. Foam)		PUBLIC PRICE	
					FLUORESCENT BASE	WHITE/BLACK BASE	FLUORESCENT BASE	WHITE/BLACK BASE
PLA124-1	1 SEAT	126x93x32 (0.38) (x2) 90x31x8 (0.02) x3	30	COM / COL	1.099 €	916 €	1.067 €	889 €
PLA124-2				G2	1.099 €	916 €	1.067 €	889 €
PLA124-3				G3	1.301 €	1.084 €	1.263 €	1.052 €
PLA124-4				G4	1.532 €	1.277 €	1.488 €	1.240 €
PLA124-5				G5	1.788 €	1.490 €	1.736 €	1.447 €

PLA224 - 2 SEATS

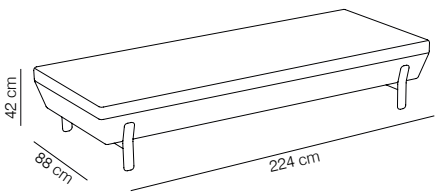

CODE	MODEL	PACKAGING	WEIGHT (kg)	FINISHES	PUBLIC PRICE (Fire Re. Foam)		PUBLIC PRICE	
					FLUORESCENT BASE	WHITE/BLACK BASE	FLUORESCENT BASE	WHITE/BLACK BASE
PLA224-1	2 SEATS	226x93x32 (0.38) (x2) 90x31x8 (0.02) x3	50	COM / COL	1.845 €	1.537 €	1.791 €	1.493 €
PLA224-2				G2	1.845 €	1.537 €	1.791 €	1.493 €
PLA224-3				G3	2.226 €	1.855 €	2.161 €	1.801 €
PLA224-4				G4	2.644 €	2.203 €	2.567 €	2.139 €
PLA224-5				G5	3.111 €	2.593 €	3.021 €	2.517 €

PLA324 - 3 SEATS

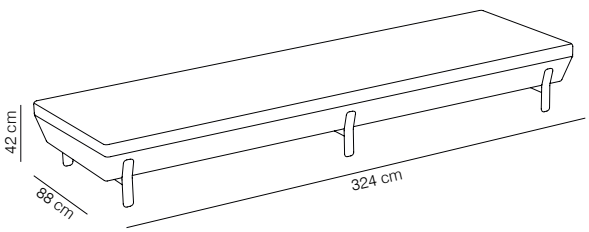

CODE	MODEL	PACKAGING	WEIGHT (kg)	FINISHES	PUBLIC PRICE (Fire Re. Foam)		PUBLIC PRICE	
					FLUORESCENT BASE	WHITE/BLACK BASE	FLUORESCENT BASE	WHITE/BLACK BASE
PLA324-1	3 SEATS	326x93x32 (0.38) (x3) 90x31x8 (0.02) x4	75	COM / COL	2.462 €	2.052 €	2.390 €	1.992 €
PLA324-2				G2	2.462 €	2.052 €	2.390 €	1.992 €
PLA324-3				G3	3.015 €	2.512 €	2.927 €	2.439 €
PLA324-4				G4	3.630 €	3.025 €	3.525 €	2.937 €
PLA324-5				G5	4.317 €	3.597 €	4.191 €	3.493 €

Platform

BY ARIK LEVY

CONSULT AVAILABILITY

SINGLE UNITS TO HELP WITH THE BUDGET

PLALB - LOW BACKREST

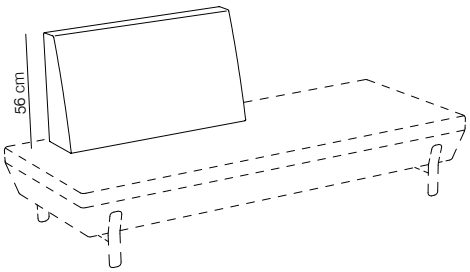

PLAHB - HIGH BACKREST

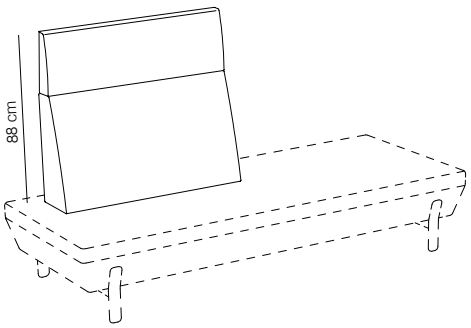

CODE	MODEL	PACKAGING	WEIGHT (kg)	FINISHES	PUBLIC PRICE (Fire Re. Foam)	PUBLIC PRICE
PLALB-1	LOW BACKREST	105X31X88 (0.29) x1	13.2	COM / COL	298 €	290 €
PLALB-2				G2	298 €	290 €
PLALB-3				G3	361 €	351 €
PLALB-4				G4	432 €	420 €
PLALB-5				G5	511 €	496 €
PLAHB-1	HIGH BACKREST	105X31X118 (0.38) x1	19.6	COM / COL	449 €	436 €
PLAHB-2				G2	449 €	436 €
PLAHB-3				G3	556 €	539 €
PLAHB-4				G4	675 €	656 €
PLAHB-5				G5	809 €	785 €

PLALS - LOW SIDE BACK

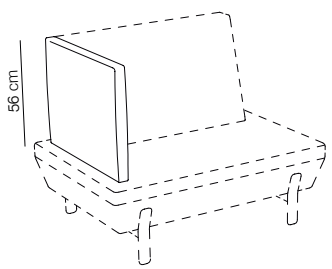

PLAHS - HIGH SIDE BACK

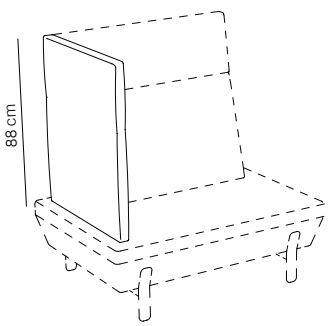

CODE	MODEL	PACKAGING	WEIGHT (kg)	FINISHES	PUBLIC PRICE (Fire Re. Foam)	PUBLIC PRICE
PLALS-1	LOW SIDE BACK	78X9X90 (0.06) x1	7.7	COM / COL	187 €	182 €
PLALS-2				G2	187 €	182 €
PLALS-3				G3	233 €	227 €
PLALS-4				G4	282 €	274 €
PLALS-5				G5	339 €	329 €
PLAHS-1	HIGH SIDE BACK	78X9X120 (0.08) x1	12	COM / COL	313 €	304 €
PLAHS-2				G2	313 €	304 €
PLAHS-3				G3	391 €	380 €
PLAHS-4				G4	479 €	465 €
PLAHS-5				G5	574 €	558 €

The backs can be ordered individually to configure different options, but the sides are only provided along with the backs, as they are joined together.

Platform

BY ARIK LEVY

CONSULT AVAILABILITY

SUGGESTIONS

The prices of the compositions shown below are valid for legs lacquered in white or black.

COMPOSITION 1

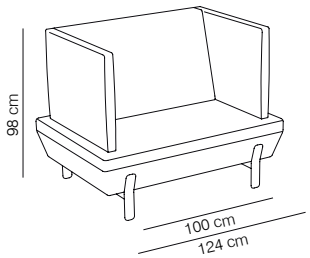

MODEL	FINISHES	PUBLIC PRICE (Fire Re. Foam)	PUBLIC PRICE
COMPOSITION 1	COM / COL	1.588 €	1.542 €
	G2	1.588 €	1.542 €
	G3	1.911 €	1.856 €
	G4	2.273 €	2.207 €
	G5	2.679 €	2.600 €

Components: 1 pc. PLA124, 1 pc. PLALB, 2 pcs. PLALS.

COMPOSITION 2

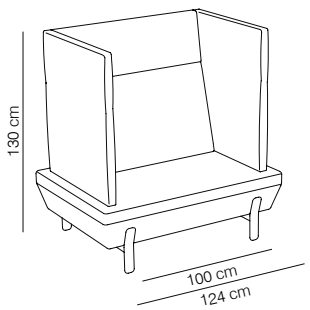

MODEL	FINISHES	PUBLIC PRICE (Fire Re. Foam)	PUBLIC PRICE
COMPOSITION 2	COM / COL	1.991 €	1.932 €
	G2	1.991 €	1.932 €
	G3	2.422 €	2.351 €
	G4	2.910 €	2.824 €
	G5	3.447 €	3.348 €

Components: 1 pc. PLA124, 1 pc. PLAHB, 2 pcs. PLAHS.

COMPOSITION 3

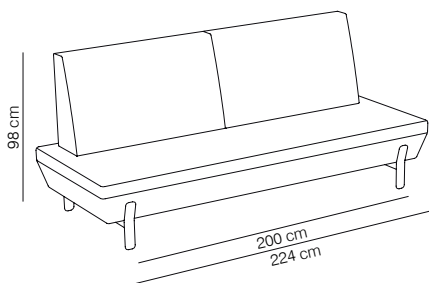

MODEL	FINISHES	PUBLIC PRICE (Fire Re. Foam)	PUBLIC PRICE
COMPOSITION 3	COM / COL	2.133 €	2.072 €
	G2	2.133 €	2.072 €
	G3	2.577 €	2.502 €
	G4	3.067 €	2.979 €
	G5	3.615 €	3.509 €

Components: 1 pc. PLA224, 2 pc. PLALB.

Platform

BY ARIK LEVY

CONSULT AVAILABILITY

SUGGESTIONS

COMPOSITION 4

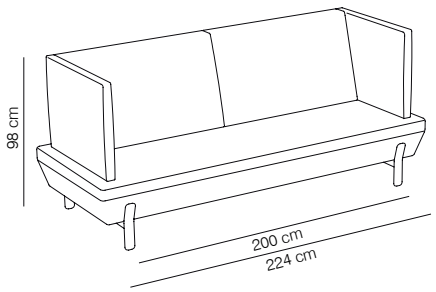

MODEL	FINISHES	PUBLIC PRICE (Fire Re. Foam)	PUBLIC PRICE
COMPOSITION 4	COM / COL	2.507 €	2.436 €
	G2	2.507 €	2.436 €
	G3	3.043 €	2.956 €
	G4	3.631 €	3.526 €
	G5	4.293 €	4.166 €

Components: 1 pc. PLA224, 2 pcs. PLALB, 2 pcs. PLALS.

COMPOSITION 5

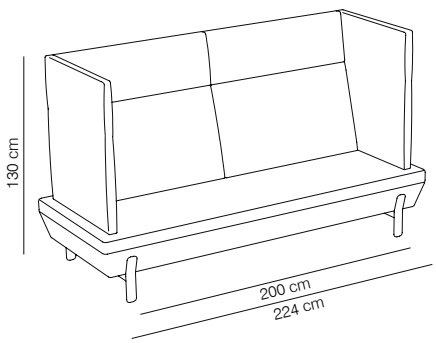

MODEL	FINISHES	PUBLIC PRICE (Fire Re. Foam)	PUBLIC PRICE
COMPOSITION 5	COM / COL	3.061 €	2.972 €
	G2	3.061 €	2.972 €
	G3	3.749 €	3.639 €
	G4	4.511 €	4.379 €
	G5	5.359 €	5.204 €

Components: 1 pc. PLA224, 2 pc. PLAHB, 2 pc. PLAHS.

COMPOSITION 6

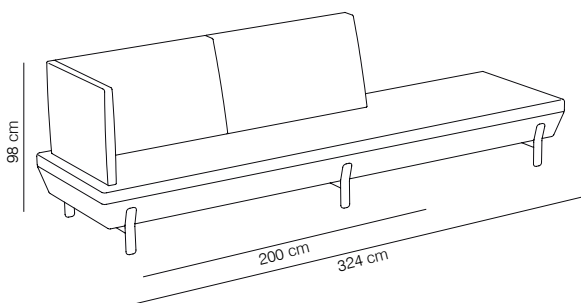

MODEL	FINISHES	PUBLIC PRICE (Fire Re. Foam)	PUBLIC PRICE
COMPOSITION 6	COM / COL	2.835 €	2.753 €
	G2	2.835 €	2.753 €
	G3	3.467 €	3.367 €
	G4	4.171 €	4.050 €
	G5	4.958 €	4.813 €

Components: 1 pc. PLA324, 2 pcs. PLALB, 1 pc. PLALS.

Platform

BY ARIK LEVY

CONSULT AVAILABILITY

SUGGESTIONS

COMPOSITION 7

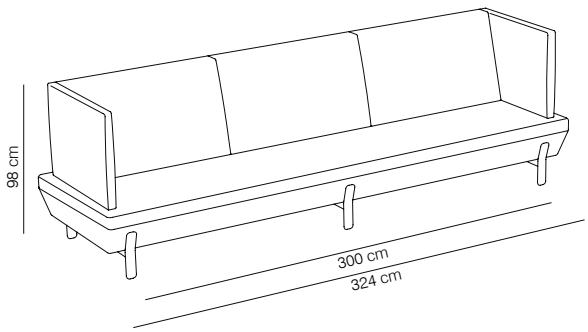

MODEL	FINISHES	PUBLIC PRICE (Fire Re. Foam)	PUBLIC PRICE
COMPOSITION 7	COM / COL	3.320 €	3.225 €
	G2	3.320 €	3.225 €
	G3	4.061 €	3.945 €
	G4	4.885 €	4.744 €
	G5	5.808 €	5.637 €

Components: 1 pc. PLA324, 3 pcs. PLALB, 2 pcs. PLALS.

COMPOSITION 8

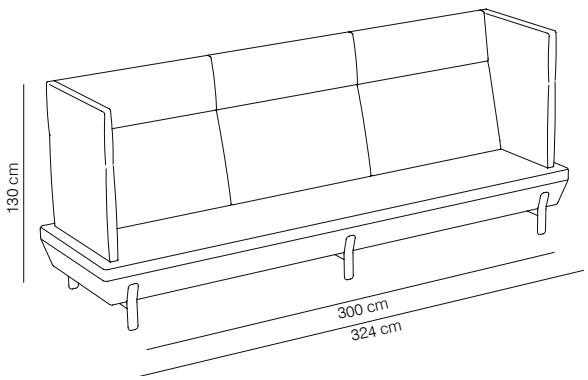

MODEL	FINISHES	PUBLIC PRICE (Fire Re. Foam)	PUBLIC PRICE
COMPOSITION 8	COM / COL	4.025 €	3.907 €
	G2	4.025 €	3.907 €
	G3	4.962 €	4.816 €
	G4	6.008 €	5.833 €
	G5	7.172 €	6.964 €

Components: 1 pc. PLA324, 3 pcs. PLAHB, 2 pcs. PLAHS

COMPOSITION 9

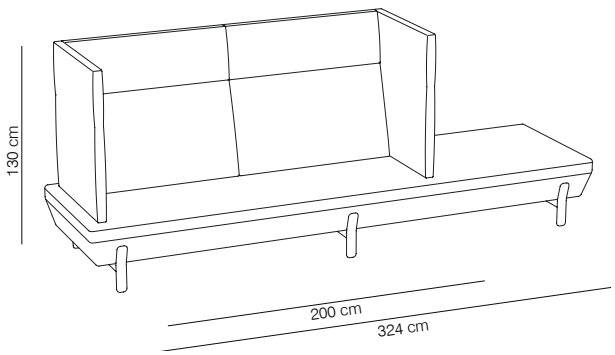

MODEL	FINISHES	PUBLIC PRICE (Fire Re. Foam)	PUBLIC PRICE
COMPOSITION 9	COM / COL	3.576 €	3.471 €
	G2	3.576 €	3.471 €
	G3	4.406 €	4.277 €
	G4	5.333 €	5.177 €
	G5	6.363 €	6.179 €

Components: 1 pc. PLA324, 2 pcs. PLAHB, 2 pcs. PLAHS

Platform

BY ARIK LEVY

CONSULT AVAILABILITY

SUGGESTIONS

COMPOSITION 10

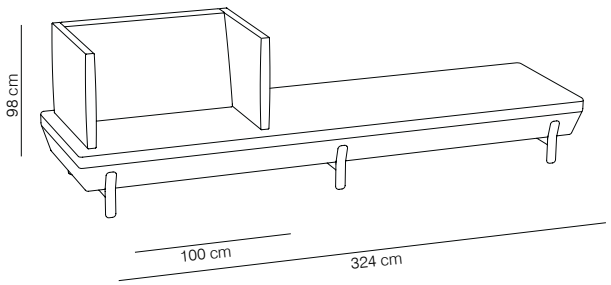

MODEL	FINISHES	PUBLIC PRICE (Fire Re. Foam)	PUBLIC PRICE
COMPOSITION 10	COM / COL	2.724 €	2.645 €
	G2	2.724 €	2.645 €
	G3	3.339 €	3.243 €
	G4	4.021 €	3.904 €
	G5	4.786 €	4.646 €

Components: 1 pc. PLA324, 1 pcs. PLALB, 2 pcs. PLALS.

COMPOSITION 11

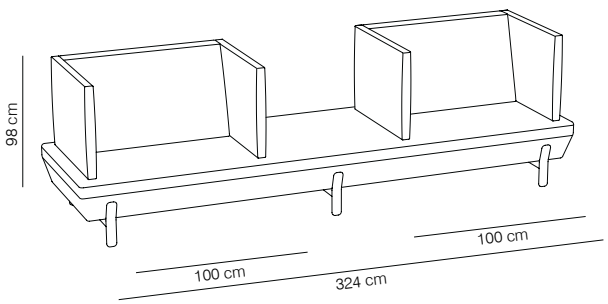

MODEL	FINISHES	PUBLIC PRICE (Fire Re. Foam)	PUBLIC PRICE
COMPOSITION 11	COM / COL	3.396 €	3.298 €
	G2	3.396 €	3.298 €
	G3	4.166 €	4.047 €
	G4	5.017 €	4.871 €
	G5	5.975 €	5.799 €

Components: 1 pc. PLA324, 2 pcs. PLALB, 4 pcs. PLALS

COMPOSITION 12

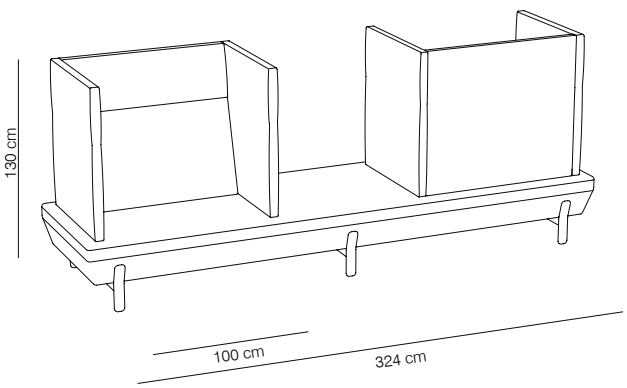

MODEL	FINISHES	PUBLIC PRICE (Fire Re. Foam)	PUBLIC PRICE
COMPOSITION 12	COM / COL	4.202 €	4.078 €
	G2	4.202 €	4.078 €
	G3	5.188 €	5.036 €
	G4	6.291 €	6.107 €
	G5	7.511 €	7.294 €

Components: 1 pc. PLA324, 2 pcs. PLAHB, 4 pcs. PLAHS

Platform

BY ARIK LEVY

CONSULT AVAILABILITY

SUGGESTIONS

COMPOSITION 13

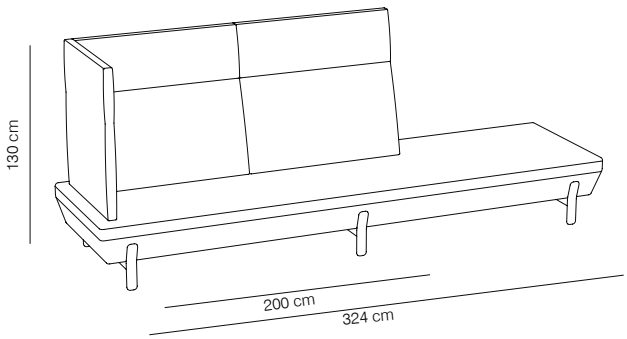

MODEL	FINISHES	PUBLIC PRICE (Fire Re. Foam)	PUBLIC PRICE
COMPOSITION 13	COM / COL	3.263 €	3.167 €
	G2	3.263 €	3.167 €
	G3	4.015 €	3.897 €
	G4	4.854 €	4.713 €
	G5	5.789 €	5.621 €

Components: 1 pc. PLA324, 2 pcs. PLAHB, 1 pcs. PLAHS.

COMPOSITION 14

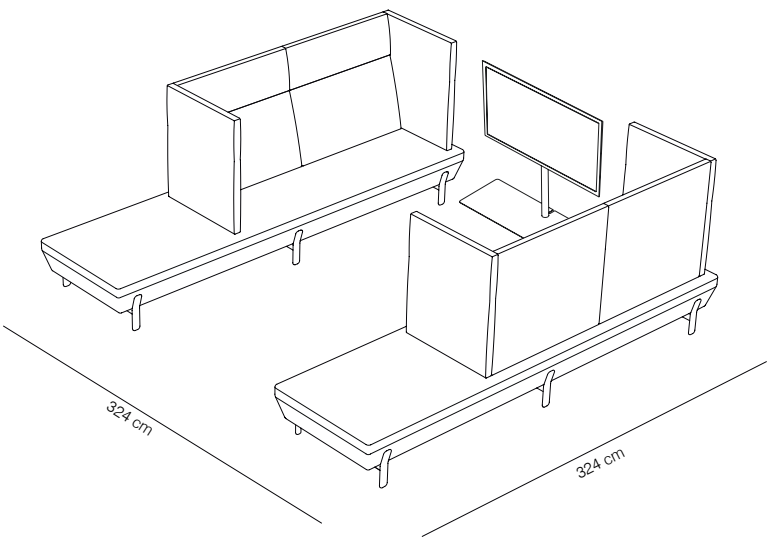

MODEL	FINISHES	PUBLIC PRICE (Fire Re. Foam)	PUBLIC PRICE
COMPOSITION 14	COM / COL	7.152 €	6.941 €
	G2	7.152 €	6.941 €
	G3	8.812 €	8.554 €
	G4	10.666 €	10.355 €
	G5	12.726 €	12.358 €

Components: 2 pc. PLA324, 4 pcs. PLAHB, 4 pcs. PLAHS

Step

BY VINCENT VAN DUYSEN

Step

BY VINCENT VAN DUYSEN

Step is a collection of seating and benches that allows for a wide variety of compositions by combining elements of differing dimensions.

Especially surprising because despite its precise formal geometric design; it has a very comfortable seat that is perfect for the residential market.

The tolerance of the different elements can be +/- 3 cm.

Cushions of soft virgin fibre with anti-acarus treatment.

A sketch must be included with your order to avoid any sort of misunderstanding. Remember that “right” and “left” are understood to be from the perspective of a person looking at the object from the front. The more information you include with your order, the lower the possibility of error.

Not produced in leather.

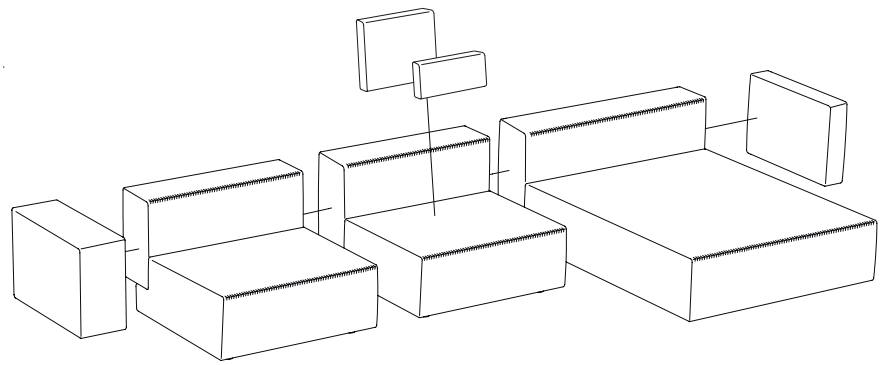

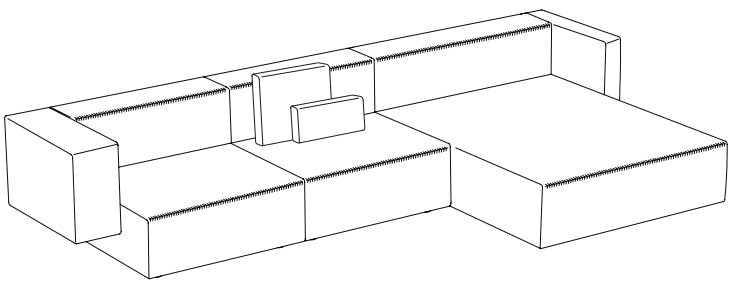

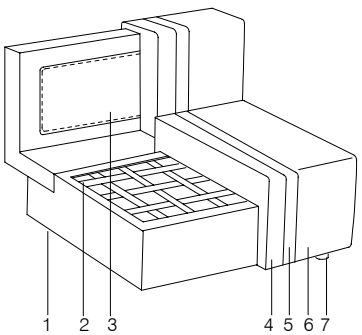

1- Interior structure of arms, back and seat in solid wood. We use PEFC certified wood.
2- Woven seat and back structure.
3- Interlining.
4- Expanded polyurethane foam in different densities.
5- Polyester fibre covering.
6- Fabric.
7- Height equalising legs.

Needed fabric for material 1.40 m wide:

ST70: 3.4m
ST90: 3.4m
STCH: 5.7m
STWA: 1.2m
STTA: 1.2m
STRI: 4.9m
STPO: 1.95m

Test Certificate:
ANSI/BIFMA X5.4-2012 and
UNE EN 16139:2013

VAR The number of boxes and their dimensions will vary depending on the composition chosen.

HANDMADE

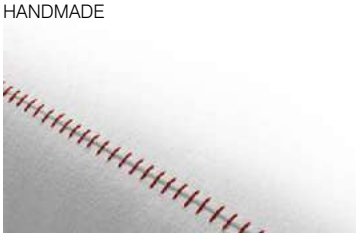

Decorative seams are made by hand.

Seams, colours available: white, black, red, sky blue, light grey, dark grey, green, cream, deep blue, caramel and wine.

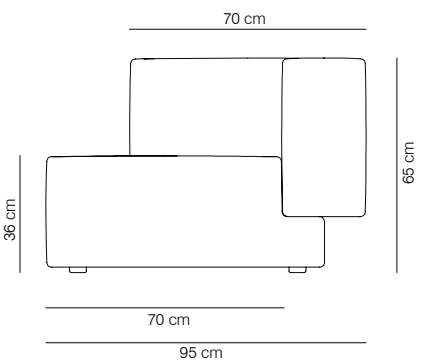

Step

BY VINCENT VAN DUYSEN

SINGLE UNITS TO HELP WITH THE BUDGET

ST70 - MODULE 70

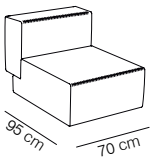

ST90 - MODULE 90

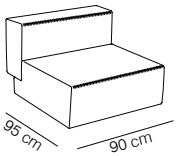

STCH - CHAISE

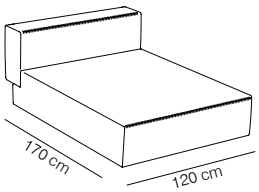

STWA - NARROW ARM

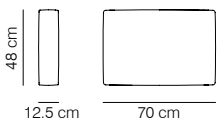

STTA - WIDE ARM

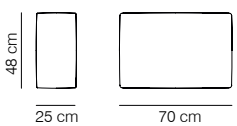

STRI - CORNER

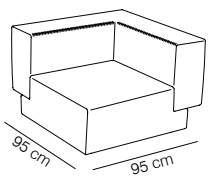

STPO - POUF

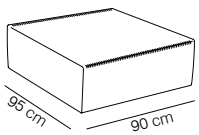

CODE	MODEL	PACKAGING	WEIGHT (kg)	FINISHES	PUBLIC PRICE (Fire Re. Foam)		PUBLIC PRICE	
					WITH SEAM	WITHOUT SEAM	WITH SEAM	WITHOUT SEAM
ST70-1	MODULE 70	99x74x69 (0,5) x1	26.7	COM / COL	1.072 €	879 €	1.041 €	853 €
ST70-2				G2	1.072 €	879 €	1.041 €	853 €
ST70-3				G3	1.174 €	980 €	1.140 €	951 €
ST70-4				G4	1.423 €	1.221 €	1.382 €	1.186 €
ST70-5				G5	1.688 €	1.476 €	1.639 €	1.433 €
ST90-1	MODULE 90	103x94x74 (0.7) x1	34.4	COM / COL	1.288 €	1.054 €	1.251 €	1.024 €
ST90-2				G2	1.289 €	1.054 €	1.251 €	1.024 €
ST90-3				G3	1.409 €	1.175 €	1.368 €	1.141 €
ST90-4				G4	1.706 €	1.463 €	1.656 €	1.420 €
ST90-5				G5	2.024 €	1.771 €	1.965 €	1.719 €
STCH-1	CHAISE	175x149x70 (1.8) x1	69.8	COM / COL	1.948 €	1.594 €	1.891 €	1.548 €
STCH-2				G2	1.947 €	1.594 €	1.891 €	1.548 €
STCH-3				G3	2.131 €	1.776 €	2.069 €	1.724 €
STCH-4				G4	2.580 €	2.211 €	2.504 €	2.147 €
STCH-5				G5	3.059 €	2.678 €	2.970 €	2.600 €
STWA-1	NARROW ARM	99x14.5x69 (0.09) (Extra volume for each unit with narrow arms)	11.5	COM / COL	-	229 €	-	222 €
STWA-2				G2	-	229 €	-	222 €
STWA-3				G3	-	280 €	-	271 €
STWA-4				G4	-	326 €	-	316 €
STWA-5				G5	-	378 €	-	367 €
STTA-1	WIDE ARM	99x27x69 (0,18) (Extra volume for each unit with wide arms)	5.75	COM / COL	-	238 €	-	231 €
STTA-2				G2	-	238 €	-	231 €
STTA-3				G3	-	294 €	-	285 €
STTA-4				G4	-	344 €	-	334 €
STTA-5				G5	-	396 €	-	384 €
STRI-1	CORNER	116x103x73 (0.87) x1	40.9	COM / COL	1.708 €	1.401 €	1.659 €	1.360 €
STRI-2				G2	1.708 €	1.401 €	1.658 €	1.360 €
STRI-3				G3	1.855 €	1.559 €	1.801 €	1.513 €
STRI-4				G4	2.259 €	1.943 €	2.193 €	1.886 €
STRI-5				G5	2.687 €	2.350 €	2.609 €	2.282 €
STPO-1	POUF	103x93x74 (0.7) x1	26.7	COM / COL	754 €	617 €	732 €	599 €
STPO-2				G2	755 €	617 €	733 €	599 €
STPO-3				G3	824 €	686 €	800 €	666 €
STPO-4				G4	998 €	855 €	969 €	830 €
STPO-5				G5	1.182 €	1.034 €	1.148 €	1.004 €

OPTIONS FOR FINISHES:

-SEAM: white, black, red, sky blue, light grey, dark grey, green, cream, deep blue, caramel and wine.

Step

BY VINCENT VAN DUYSEN

MODULE 70

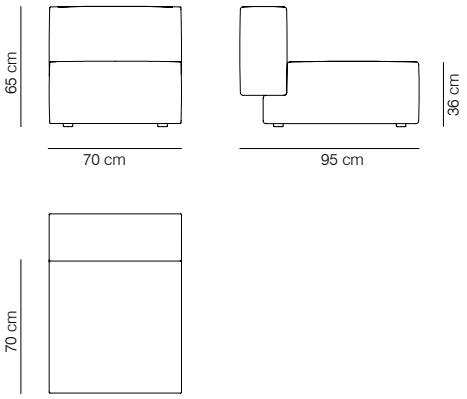

MODULE 90

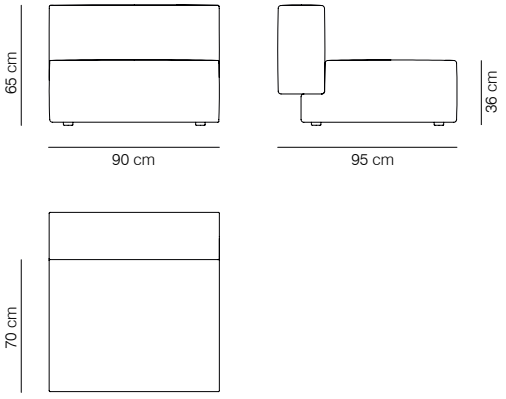

CORNER

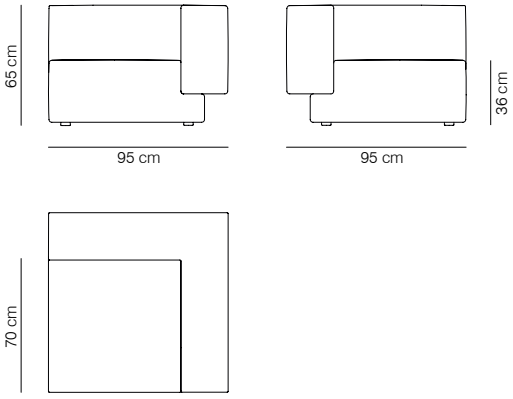

POUF

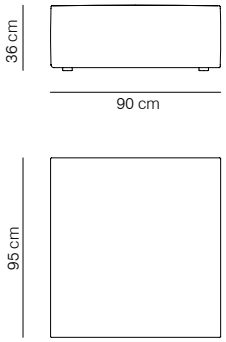

CHAISE

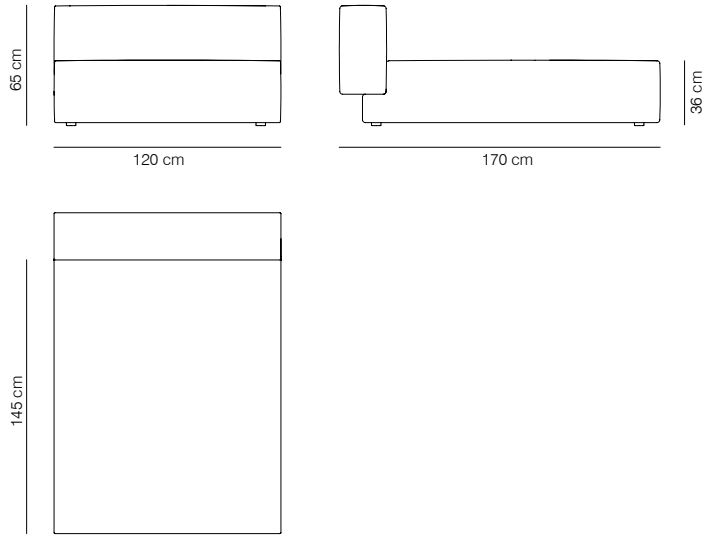

NARROW ARM

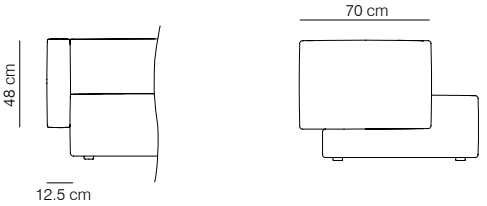

WIDE ARM

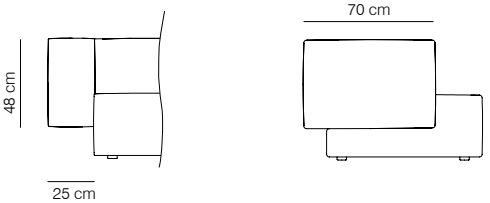

Step
BY VINCENT VAN DUYSEN

SUGGESTIONS

All the options can be with or without arm and it is possible to combine a W arm (wide) with an N (narrow) in the same composition.
Indicate in the order the arms that you would like.

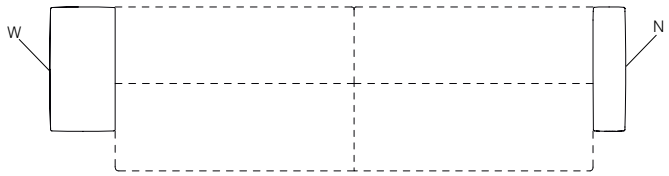

COMPOSITION 1

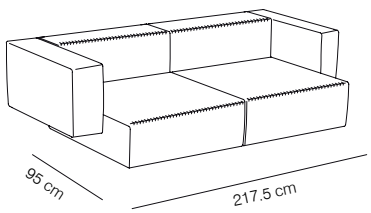

MODEL	VOL. (m3)	WEIGHT (kg)	FINISHES	PUBLIC PRICE (Fire Re. Foam)		PUBLIC PRICE	
				WITH SEAM	WITHOUT SEAM	WITH SEAM	WITHOUT SEAM
COMPOSITION 1	1.33	101.4	COM / COL	3.043 €	2.575 €	2.955 €	2.500 €
			G2	3.045 €	2.575 €	2.956 €	2.500 €
			G3	3.392 €	2.924 €	3.292 €	2.838 €
			G4	4.082 €	3.596 €	3.963 €	3.490 €
			G5	4.822 €	4.316 €	4.681 €	4.189 €

Components: 1 pc. STTA, 1 pc. STWA, 2 pcs. ST90.

COMPOSITION 2

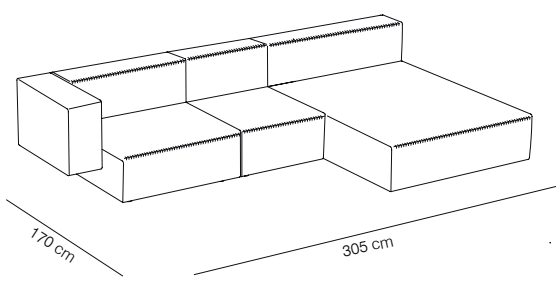

MODEL	VOL. (m3)	WEIGHT (kg)	FINISHES	PUBLIC PRICE (Fire Re. Foam)		PUBLIC PRICE	
				WITH SEAM	WITHOUT SEAM	WITH SEAM	WITHOUT SEAM
COMPOSITION 2	2.73	152.1	COM / COL	4.546 €	3.765 €	4.414 €	3.656 €
			G2	4.546 €	3.765 €	4.414 €	3.656 €
			G3	5.008 €	4.225 €	4.862 €	4.101 €
			G4	6.053 €	5.239 €	5.876 €	5.086 €
			G5	7.167 €	6.321 €	6.958 €	6.136 €

Components: 1 pc. STCH, 1 pc. STTA, 1 pc. ST90, 1 pc. ST70.

Step

BY VINCENT VAN DUYSEN

SUGGESTIONS

COMPOSITION 3

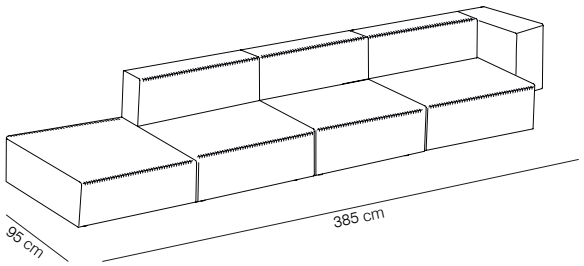

MODEL	VOL. (m3)	WEIGHT (kg)	FINISHES	PUBLIC PRICE (Fire Re. Foam)		PUBLIC PRICE	
				WITH SEAM	WITHOUT SEAM	WITH SEAM	WITHOUT SEAM
COMPOSITION 3	3.3	148.1	COM / COL	4.856 €	4.017 €	4.715 €	3.901 €
			G2	4.860 €	4.017 €	4.717 €	3.901 €
			G3	5.345 €	4.505 €	5.189 €	4.373 €
			G4	6.460 €	5.588 €	6.272 €	5.425 €
			G5	7.650 €	6.743 €	7.427 €	6.546 €

Components: 1 pc. STPO, 1 pc. STTA, 3 pcs. ST90.

COMPOSITION 4

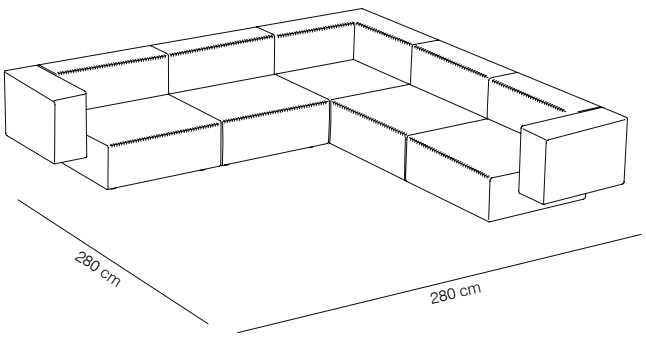

MODEL	VOL. (m3)	WEIGHT (kg)	FINISHES	PUBLIC PRICE (Fire Re. Foam)		PUBLIC PRICE	
				WITH SEAM	WITHOUT SEAM	WITH SEAM	WITHOUT SEAM
COMPOSITION 4	3.1	208	COM / COL	6.904 €	5.743 €	6.704 €	5.576 €
			G2	6.906 €	5.743 €	6.705 €	5.576 €
			G3	7.609 €	6.457 €	7.387 €	6.268 €
			G4	9.205 €	7.999 €	8.936 €	7.765 €
			G5	10.903 €	9.636 €	10.584 €	9.354 €

Components: 1 pc. STRI, 2 pcs. STTA, 2 pcs. ST90, 2 pcs. ST70.

COMPOSITION 5

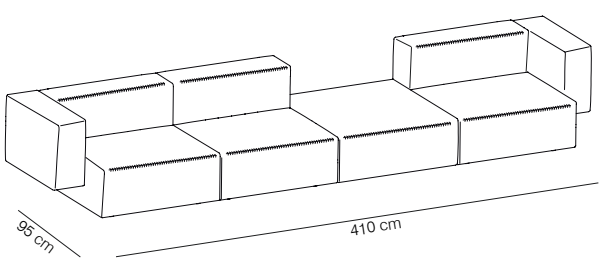

MODEL	VOL. (m3)	WEIGHT (kg)	FINISHES	PUBLIC PRICE (Fire Re. Foam)		PUBLIC PRICE	
				WITH SEAM	WITHOUT SEAM	WITH SEAM	WITHOUT SEAM
COMPOSITION 5	2.74	166.1	COM / COL	5.094 €	4.255 €	4.947 €	4.132 €
			G2	5.098 €	4.255 €	4.948 €	4.132 €
			G3	5.639 €	4.799 €	5.474 €	4.659 €
			G4	6.804 €	5.932 €	6.605 €	5.758 €
			G5	8.046 €	7.139 €	7.811 €	6.930 €

Components: 1 pc. STPO, 2 pc. STTA, 3 pc. ST90.

Step
BY VINCENT VAN DUYSEN

SUGGESTIONS

COMPOSITION 6

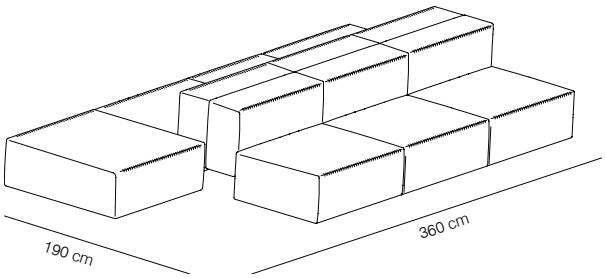

MODEL	VOL. (m3)	WEIGHT (kg)	FINISHES	PUBLIC PRICE (Fire Re. Foam)		PUBLIC PRICE	
				WITH SEAM	WITHOUT SEAM	WITH SEAM	WITHOUT SEAM
COMPOSITION 6	4.5	237.2	COM / COL	8.482 €	6.941 €	8.237 €	6.740 €
			G2	8.489 €	6.941 €	8.240 €	6.740 €
			G3	9.278 €	7.736 €	9.007 €	7.511 €
			G4	11.234 €	9.633 €	10.908 €	9.352 €
			G5	13.326 €	11.660 €	12.938 €	11.319 €

Components: 1 pc. STPO, 6 pcs. ST90.

CUSHIONS

Cushions of soft virgin fibre with anti-acarus treatment.

STAL25 - CUSHION

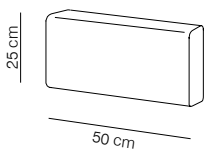

STAL50 - CUSHION

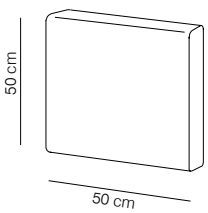

CODE	MODEL	VOL (m3)	WEIGHT (kg)	FINISHES	PUBLIC PRICE
STAL25-1	CUSHION 50X25	Included on the module	-	COM / COL	48 €
STAL25-2				G2	48 €
STAL25-3				G3	68 €
STAL25-4				G4	108 €
STAL25-5				G5	129 €
STAL50-1	CUSHION 50X50	Included on the module	-	COM / COL	64 €
STAL50-2				G2	64 €
STAL50-3				G3	91 €
STAL50-4				G4	143 €
STAL50-5				G5	172 €

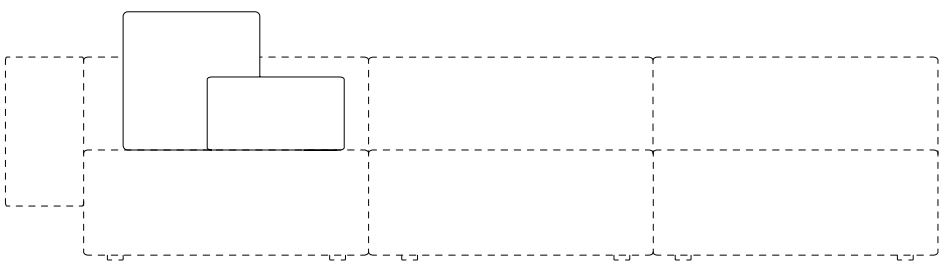

Levitt

BY LUDOVICA + ROBERTO PALOMBA

Levitt

BY LUDOVICA + ROBERTO PALOMBA

Levitt is a collection of modular sofas and armchairs that allow to multiply compositions and finishes .

The seat depth of the sofa is 90 cm without cushions so do not forget to order the back cushions that you need.

The direction of the fabric in the chaise lounge and similar sizes options will be the opposite to the side unit to avoid visible sewing.

The tolerance of the different elements can be +/- 3 cm.

Indicate in the order the cushion/back that you would like.

Cushions in washed duck and goose feather with anti-acarus treatment.

Anti-feather scape cotton cover.

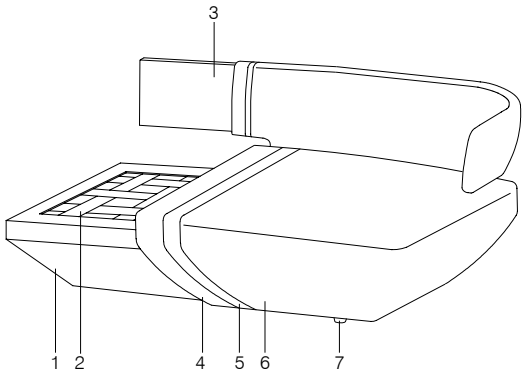

The armchair will be supplied with a wide right arm (front-on-view); although it can also be made with a wide left arm (in any case it is essential that you provide us with a sketch when making the order so that no mistakes are made).
The other models will be supplied with the arm in the position that is shown in each sketch.

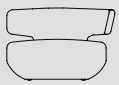
Right

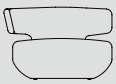
Left

1- Interior structure of seat in solid wood.
We use PEFC certified wood.
2- Woven seat structure.
3- Structure in plywood with curved back.
4- Expanded polyurethane viscoelastic foam in different densities.
5- Polyester fibre covering.
6- Fabric or leather.
7- Height equalising legs.

Test Certificate:
ANSI/BIFMA X5.4-2012 and UNE EN 16139:2013

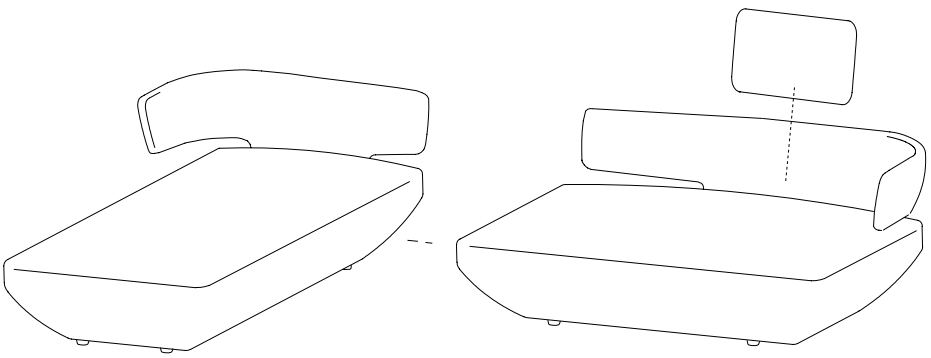

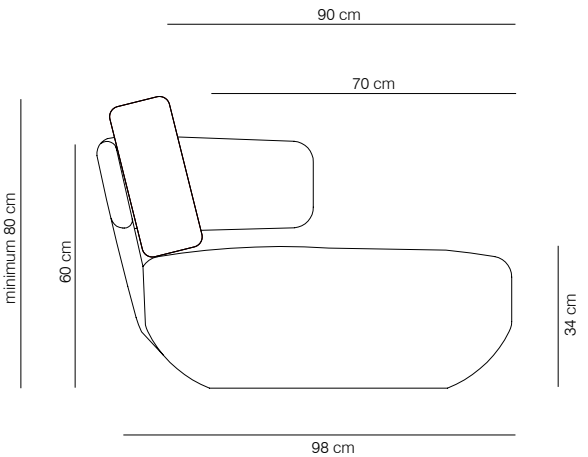

Levitt

BY LUDOVICA + ROBERTO PALOMBA

ARMCHAIR

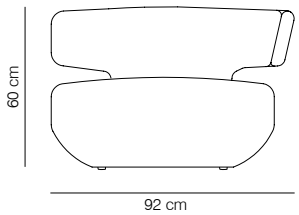

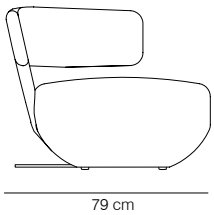

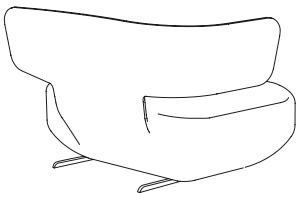

Needed fabric for material 1.40 m wide:
ARMCHAIR: 3 m
SOFA 152: 5.2 m

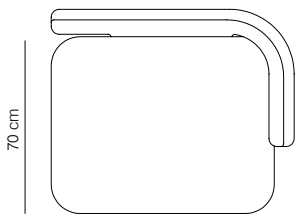

MODEL	PACKAGING	WEIGHT (kg)	FINISHES	PUBLIC PRICE (Fire Re. Foam)	PUBLIC PRICE
ARMCHAIR	99x92x65 (0.59) x1	34	COM / COL	1.591 €	1.544 €
			G2	1.591 €	1.544 €
			G3	1.750 €	1.699 €
			G4	1.924 €	1.868 €
			G5	2.310 €	2.243 €

Legs made with calibrated chromed steel.

BACK SUGGESTIONS:

- 1 pc. LEAL 70.
- 1 pc. LEAL 55.

SOFA 152

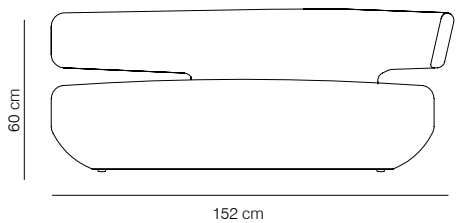

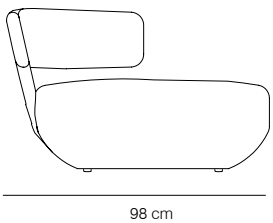

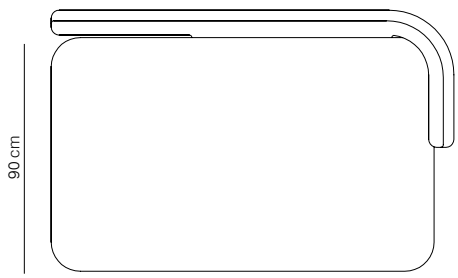

MODEL	PACKAGING	WEIGHT (kg)	FINISHES	PUBLIC PRICE (Fire Re. Foam)	PUBLIC PRICE
SOFA 152	156X102X64(1.02) 53x15x9 (0.02) x2	49	COM / COL	2.243 €	2.178 €
			G2	2.243 €	2.178 €
			G3	2.468 €	2.396 €
			G4	2.715 €	2.636 €
			G5	3.258 €	3.163 €

BACK SUGGESTIONS:

- 2 pcs. LEAL 70.
- 2 pcs. LEAL 55.

Levitt

BY LUDOVICA + ROBERTO PALOMBA

SOFA 184

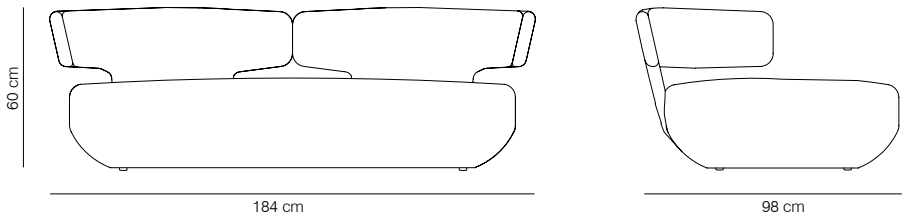

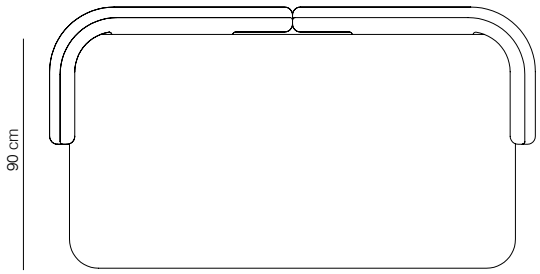

Needed fabric for material 1.40 m wide:
SOFA 184: 6.3 m
SOFA 244: 8 m

MODEL	PACKAGING	WEIGHT (kg)	FINISHES	PUBLIC PRICE (Fire Re. Foam)	PUBLIC PRICE
SOFA 184	185X99X66 (1.21) 53x15x9 (0.02) x2	87.6	COM / COL	2.982 €	2.896 €
			G2	2.982 €	2.896 €
			G3	3.263 €	3.168 €
			G4	4.257 €	4.133 €
			G5	4.866 €	4.724 €

BACK SUGGESTIONS:

- 2 pcs. LEAL 70.
- 3 upcs. LEAL 55.

SOFA 244

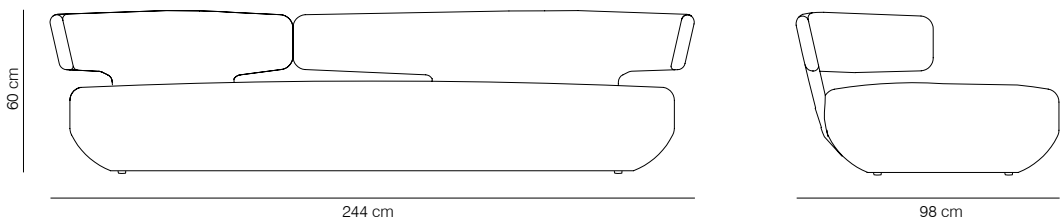

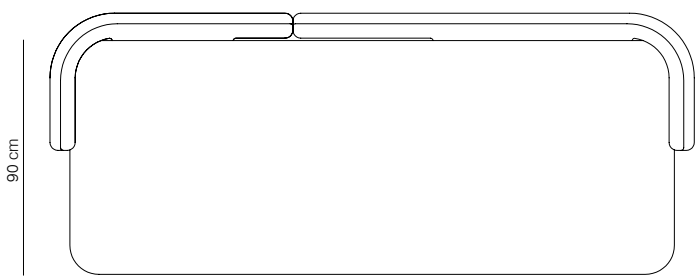

MODEL	PACKAGING	WEIGHT (kg)	FINISHES	PUBLIC PRICE (Fire Re. Foam)	PUBLIC PRICE
SOFA 244	248x102x64 (1.62) 53x15x9 (0,02) x2	72	COM / COL	3.750 €	3.641 €
			G2	3.750 €	3.641 €
			G3	4.126 €	4.006 €
			G4	4.537 €	4.405 €
			G5	5.446 €	5.287 €

BACK SUGGESTIONS:

- 3 pcs. LEAL 70.
- 4 pcs. LEAL 55.

Levitt

BY LUDOVICA + ROBERTO PALOMBA

CHAISE

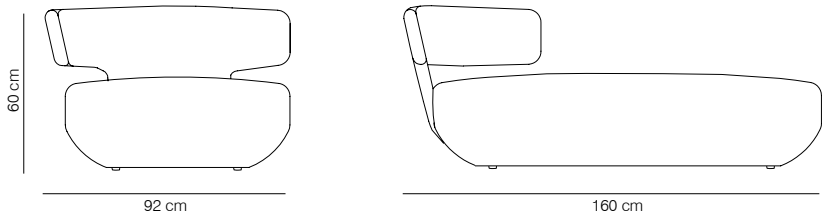

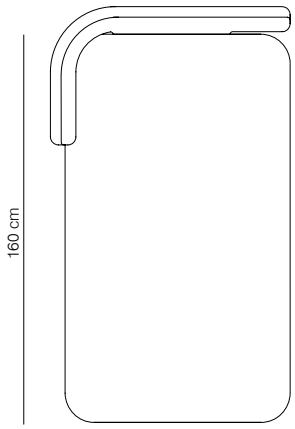

Needed fabric for material 1.40 m wide:
CHAISE= 4.9 m

MODEL	PACKAGING	WEIGHT (kg)	FINISHES	PUBLIC PRICE (Fire Re. Foam)	PUBLIC PRICE
CHAISE	96x164x64 (1.09) x1	47	COM / COL	1.955 €	1.898 €
			G2	1.955 €	1.898 €
			G3	2.151 €	2.088 €
			G4	2.366 €	2.297 €
			G5	2.839 €	2.756 €

BACK SUGGESTIONS:

- 1 pc. LEAL 70.
- 1 pc. LEAL 55.

COMPOSITION L1

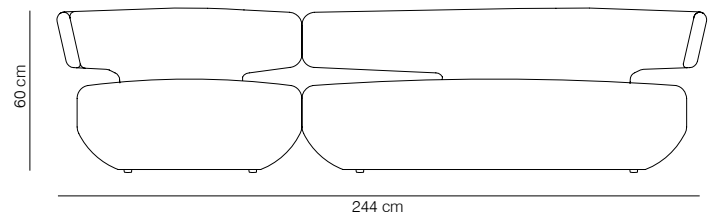

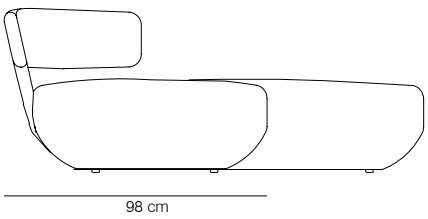

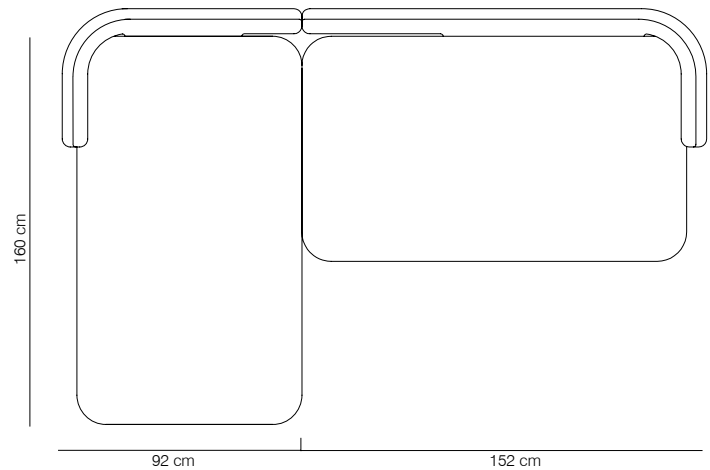

MODEL	VOL (m3)	WEIGHT (kg)	FINISHES	PUBLIC PRICE (Fire Re. Foam)	PUBLIC PRICE
COMPOSITION L1	1.88	96	COM / COL	4.198 €	4.076 €
			G2	4.198 €	4.076 €
			G3	4.619 €	4.484 €
			G4	5.081 €	4.933 €
			G5	6.097 €	5.920 €

BACK SUGGESTIONS:

- 3 pcs. LEAL 70.
- 4 pcs. LEAL 55.

Levitt

BY LUDOVICA + ROBERTO PALOMBA

CUSHIONS & BACKS

Cushions in washed duck and goose feather with anti-acarus treatment.
Anti-feather scape cotton cover.

LEAL48 - CUSHION

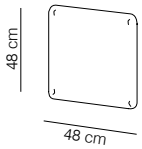

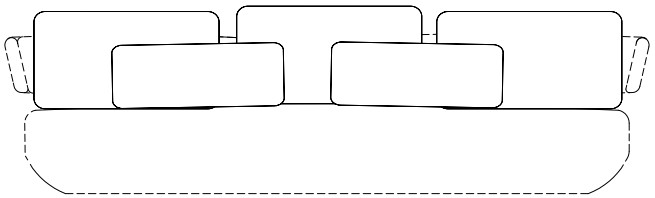

Needed fabric for material
1.40 m wide:

LEAL70: 1.2 m
LEAL35: 1.2 m
LEAL55: 0.95 m
LEAL48: 0.9 m

LEAL35 - CUSHION

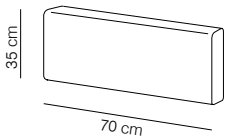

LEAL55 - BACK

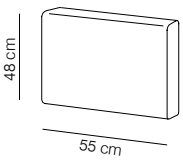

LEAL70 - BACK

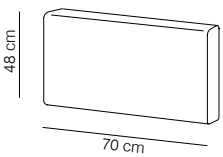

CODE	MODEL	VOL (m3)	WEIGHT (kg)	FINISHES	PUBLIC PRICE
LEAL48-1	CUSHION 48X48	Included on the sofa	1.7	COM / COL	63 €
LEAL48-2				G2	63 €
LEAL48-3				G3	90 €
LEAL48-4				G4	144 €
LEAL48-5				G5	175 €
LEAL35-1	CUSHION 70X35	Included on the sofa	1.7	COM / COL	83 €
LEAL35-2				G2	83 €
LEAL35-3				G3	101 €
LEAL35-4				G4	174 €
LEAL35-5				G5	220 €
LEAL55-1	BACK 55X48	Included on the sofa	2.2	COM / COL	83 €
LEAL55-2				G2	83 €
LEAL55-3				G3	101 €
LEAL55-4				G4	174 €
LEAL55-5				G5	220 €
LEAL70-1	BACK 70X48	Included on the sofa	2	COM / COL	95 €
LEAL70-2				G2	95 €
LEAL70-3				G3	115 €
LEAL70-4				G4	189 €
LEAL70-5				G5	234 €

Window

BY VINCENT VAN DUYSEN

Window

BY VINCENT VAN DUYSEN

WIPI - COAT HANGER_FREE STANDING

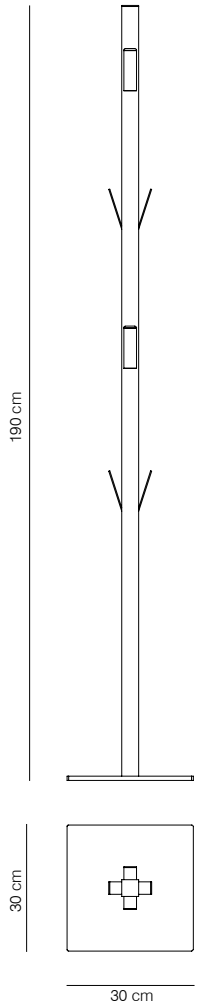

WIPA - COAT HANGER_WALL

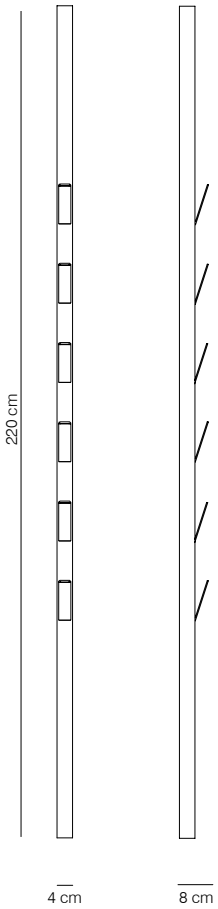

Calibrated powder coated steel tube in thermoreinforced polyester in black or white microtexturized.

Rounded hangers laser cut and carefully designed dimensions for the proper care of the clothes.

Polyethylene mousse interior in black or white.

Test certificates:
UNE EN 14749:06 and
UNE EN 56843:2001.

WIPR - UMBRELLA STAND

Powder coated steel tube in thermoreinforced epoxy in black or white.

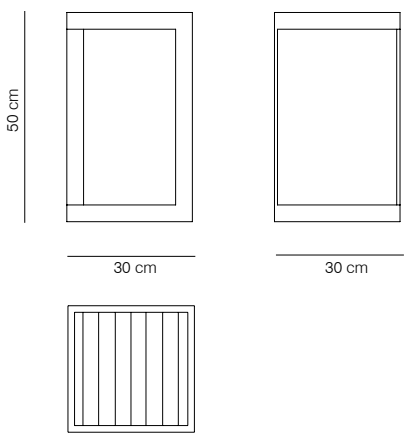

CODE	MODEL	PACKAGING	WEIGHT (kg)	FINISHES	PUBLIC PRICE
WIPIN	COAT HANGER FREE STANDING	17x17x193 (0.06) 7x38x38 (0.01) x2	16.4	black	312 €
WIPIB				white	
WIPAN	COAT HANGER WALL	17x17x223 (0.06) x1	9	black	228 €
WIPAB				white	
WIPRN	UMBRELLA STAND	47x46x54 (0.11) x1	6	black	312 €
WIPRB				white	
Indicate in the order the inside colour: white or black					

Pillows

BY ODOSDESIGN

Pillows

Washed and sterilised duck and goose down cushion with pure hollow virgin and silicon fibre. 100% anti-mite treatment.
No-pill cotton cover.

It is not available in the following fabrics:

viccarbe CONTRACT
LEATHER and VINYL.

kvadrat
SAVANA, DIVINA and DIVINA MELAGNE.

camira
ADVANTAGE and BLAZER.

VAR
The number of boxes and their dimensions will vary depending on the number of pillows.

DIM SUM by Odosdesign

Cushion with meticulous stitching on the corners to create a diamond-shaped silhouette.
Unless otherwise indicated, the back of the cushion is upholstered in the same way as the front.

Needed fabric for material 1.40 m wide:
Measure 48x48: 0.7 m
Measure 60x50: 0.8 m
Measure 70x50: 1 m
Measure 70x70: 1 m

DI48 -DIMSUM 48x48

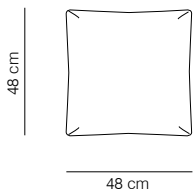

DI60 - DIMSUM 70x50

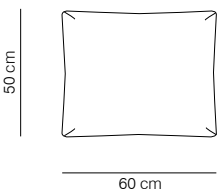

DI70 - DIMSUM 70x50

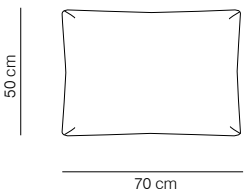

DI70C - DIMSUM 70x70

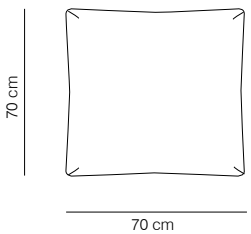

CODE	MODEL	PACKAGING	WEIGHT (kg)	FINISHES	PUBLIC PRICE
DI48-1	48 x 48	VAR	0.6	COM / COL	69 €
DI48-2				G2	69 €
DI48-3				G3	87 €
DI48-4				G4	106 €
DI48-5				G5	123 €
DI60-1	60 x 50		0.75	COM / COL	86 €
DI60-2				G2	86 €
DI60-3				G3	107 €
DI60-4				G4	129 €
DI60-5				G5	150 €
DI70-1	70 x 50		0.9	COM / COL	97 €
DI70-2				G2	97 €
DI70-3				G3	125 €
DI70-4				G4	154 €
DI70-5				G5	182 €
DI70C-1	70 x 70		1.2	COM / COL	105 €
DI70C-2				G2	105 €
DI70C-3				G3	132 €
DI70C-4				G4	161 €
DI70C-5				G5	190 €

Pillows

Washed and sterilised duck and goose down cushion with pure hollow virgin and silicon fibre. 100% anti-mite treatment.
No-pill cotton cover.

It is not available in the following fabrics:

viccarbe CONTRACT LEATHER and VINYL.

kvadrat SAVANA, DIVINA and DIVINA MELAGNE.

camira ADVANTAGE and BLAZER.

VAR The number of boxes and their dimensions will vary depending on the number of pillows.

MANDARA by Odosdesign

Cushion with handcrafted stitching on two edges.

Needed fabric for material 1.40 m wide:
Measure 48x48: 0.7 m
Measure 60x50: 0.8 m
Measure 70x50: 1 m
Measure 70x70: 1 m

MA48 - MANDARA 48x48

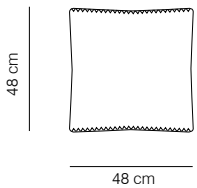

MA60 - MANDARA 60x50

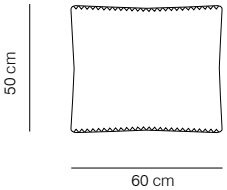

MA70 - MANDARA 70x50

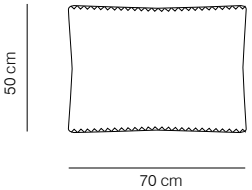

MA70C - MANDARA 70x70

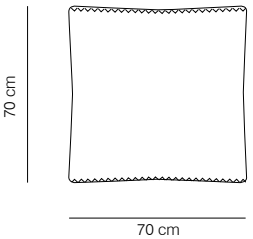

CODE	MODEL	PACKAGING	WEIGHT (kg)	FINISHES		PUBLIC PRICE
				SEAM	UPHOLSTERY	
MA48-1	48 x 48	VAR	0.6	white, black, red, sky blue, light grey, dark grey, green, cream, deep blue, caramel and wine.	COM / COL	69 €
MA48-2					G2	69 €
MA48-3					G3	87 €
MA48-4					G4	106 €
MA48-5					G5	124 €
MA60-1	60 x 50		0.75		COM / COL	86 €
MA60-2					G2	86 €
MA60-3					G3	108 €
MA60-4					G4	131 €
MA60-5					G5	154 €
MA70-1	70 x 50		0.9		COM / COL	97 €
MA70-2					G2	97 €
MA70-3					G3	128 €
MA70-4					G4	158 €
MA70-5					G5	187 €
MA70C-1	70 x 70		1.2		COM / COL	105 €
MA70C-2					G2	105 €
MA70C-3					G3	136 €
MA70C-4					G4	166 €
MA70C-5					G5	196 €

Pillows

Washed and sterilised duck and goose down cushion with pure hollow virgin and silicon fibre. 100% anti-mite treatment.
No-pill cotton cover.

It is not available in the following fabrics:

viccarbe CONTRACT
LEATHER and VINYL.

kvadrat
SAVANA, DIVINA and DIVINA MELAGNE.

camira
ADVANTAGE and BLAZER.

VAR The number of boxes and their dimensions will vary depending on the number of pillows.

ZIP by Odosdesign

Cushion with a zip around the perimeter available in the following colours: Blue RAL 660-1, green RAL 6029, red RAL 3001, yellow RAL 1016 and black RAL 9005.

Needed fabric for material 1.40 m wide:

Measure 48x48: 0.7 m	Measure 70x50: 1 m
Measure 60x50: 0.8 m	Measure 70x70: 1 m

ZI48 - ZIP 48x48

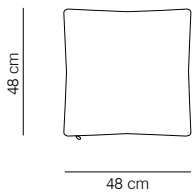

ZI60 - ZIP 60x50

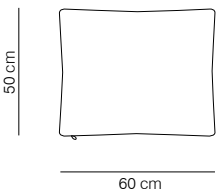

ZI70 - ZIP 70x50

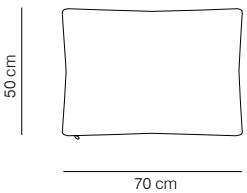

ZI70C - ZIP 70x70

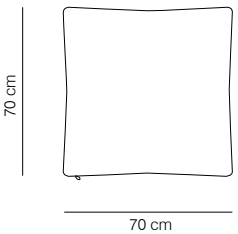

CODE	MODEL	PACKAGING	WEIGHT (kg)	FINISHES		PUBLIC PRICE
				ZIP	UPHOLSTERY	
ZI48-1	48 x 48	VAR	0.6	Blue Green Red Yellow Black	COM / COL	92 €
ZI48-2					G2	92 €
ZI48-3					G3	114 €
ZI48-4					G4	136 €
ZI48-5					G5	158 €
ZI60-1	60 x 50		0.75		COM / COL	112 €
ZI60-2					G2	112 €
ZI60-3					G3	138 €
ZI60-4					G4	164 €
ZI60-5					G5	190 €
ZI70-1	70 x 50		0.9		COM / COL	125 €
ZI70-2					G2	125 €
ZI70-3					G3	160 €
ZI70-4					G4	194 €
ZI70-5					G5	229 €
ZI70C-1	70 x 70		1.2		COM / COL	135 €
ZI70C-2					G2	135 €
ZI70C-3					G3	169 €
ZI70C-4					G4	204 €
ZI70C-5					G5	238 €

Pillows

Washed and sterilised duck and goose down cushion with pure hollow virgin and silicon fibre. 100% anti-mite treatment.
No-pill cotton cover.

It is not available in the following fabrics:

viccarbe CONTRACT LEATHER and VINYL.

kvadrat SAVANA, DIVINA and DIVINA MELAGNE.

camira ADVANTAGE and BLAZER.

VAR The number of boxes and their dimensions will vary depending on the number of pillows.

APPETITE by Odosdesign

Cushion with subtle hand-sewn backstitching.

Needed fabric for material 1.40 m wide:
Measure 48x48: 0.7 m Measure 70x50: 1 m
Measure 60x50: 0.8 m Measure 70x70: 1 m

AP48 - APPETITE 48x48

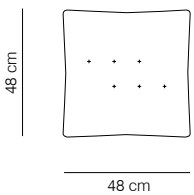

AP60 - APPETITE 60x50

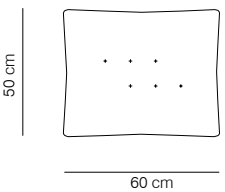

AP70 - APPETITE 70x50

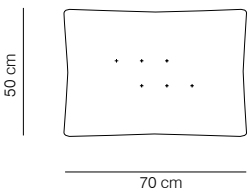

AP70C - APPETITE 70x70

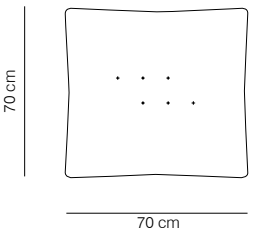

CODE	MODEL	PACKAGING	WEIGHT (kg)	FINISHES	PUBLIC PRICE
AP48-1	48 x 48	VAR	0.6	COM / COL	106 €
AP48-2				G2	106 €
AP48-3				G3	128 €
AP48-4				G4	150 €
AP48-5				G5	171 €
AP60-1	60 x 50		0.75	COM / COL	125 €
AP60-2				G2	125 €
AP60-3				G3	152 €
AP60-4				G4	177 €
AP60-5				G5	204 €
AP70-1	70 x 50		0.9	COM / COL	139 €
AP70-2				G2	139 €
AP70-3				G3	174 €
AP70-4				G4	208 €
AP70-5				G5	243 €
AP70C-1	70 x 70		1.2	COM / COL	148 €
AP70C-2				G2	148 €
AP70C-3				G3	183 €
AP70C-4				G4	217 €
AP70C-5				G5	252 €

The Viccarte collection edits artistic furniture pieces without pressure or market requirements.

Viccarte does not edit furniture pieces but sculptures so its use must be careful since they are not subject to tests of severe use, stability, etc.

Therefore Viccarbe is not responsible for damages of the piece or to third parties for an improper use.

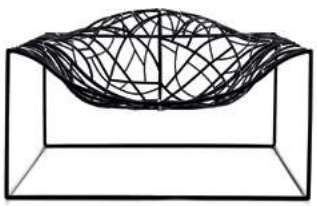

Ad-Hoc

BY JEAN-MARIE MASSAUD

Up in the air

BY RAMÓN ÚBEDA & OTTO CANALDA

Giro

BY PEDRO PAULO VENZON

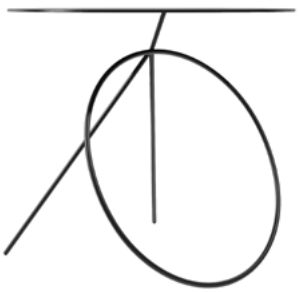

Bamba

BY PEDRO PAULO VENZON

Ad-Hoc

BY JEAN-MARIE MASSAUD

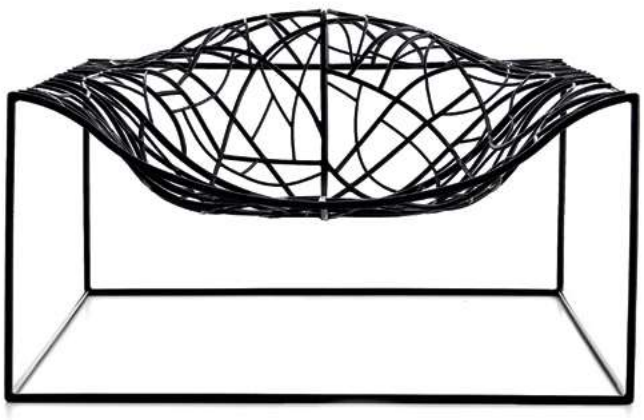

Ad-Hoc

BY JEAN-MARIE MASSAUD

VICCARTE

The Viccarte collection edits artistic furniture pieces without pressure or market requirements.
Viccarte does not edit furniture pieces but sculptures so its use must be careful since they are not subject to tests of severe use, stability, etc.
Therefore Viccarbe is not responsible for damages of the piece or to third parties for an improper use.

AD-HOC - ESCULPTURE ARMCHAIR

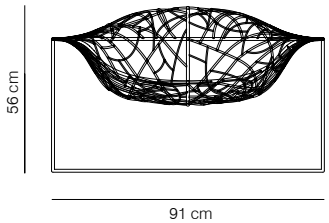

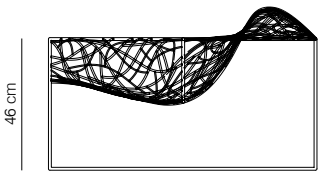

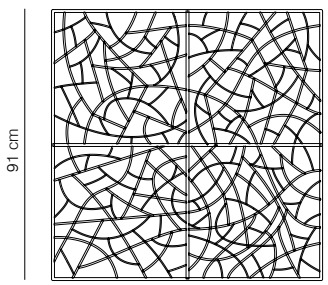

Brass structure handmade.

As for the handcrafted process, may the design slightly change from one piece to another, being this part of its charm.

Note: The gold version is not suitable for outdoor use.

Test certificates:
UNE EN 15373:07*
* See the list of tests on page 282.

CODE	MODEL	PACKAGING	WEIGHT (kg)	FINISHES	PUBLIC PRICE
AD-HOC	ESCULPTURE ARMCHAIR indoor + outdoor	98x97x67 (0.65) x1	27	white, black (microtexturized)	5.348 €
	ESCULPTURE ARMCHAIR indoor			gold	8.990 €
For gold armchairs the production delay is twelve weeks.					

Up In The Air

BY RAMÓN ÚBEDA + OTTO CANALDA

Up In The Air

BY RAMÓN ÚBEDA + OTTO CANALDA

VICCARTE

The Viccarte collection edits artistic furniture pieces without pressure or market requirements.
Viccarte does not edit furniture pieces but sculptures so its use must be careful since they are not subject to tests of severe use, stability, etc.
Therefore Viccarbe is not responsible for damages of the piece or to third parties for an improper use.

Collection tables lacquered in white or black with handmade fish replicas, floating in UV resistant silicone.
Anti-reflective optical glass. As for the handcrafted process, may the design slightly change from one fish to another.

UP35 - HEIGHT 35

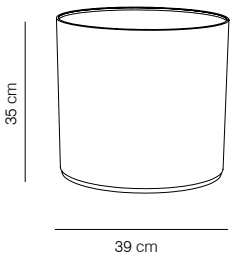

UP45 - HEIGHT 45

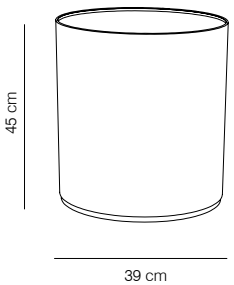

CODE	MODEL	PACKAGING	WEIGHT (kg)	FINISHES		PUBLIC PRICE
				LACQUER	FISH	
UP35	HEIGHT 35	47x47x46 (0.10) x1	20.4	white and black	one fish 'golden carp'	1.766 €
					one fish 'bubble eyes'	1.766 €
					two fish 'dragon eyes'	1.888 €
					three fish 'golden carp'	2.010 €
UP45	HEIGHT 45	47X49X55 (0.13) x1	24	white and black	one fish 'golden carp'	1.766 €
					one fish 'bubble eyes'	1.766 €
					two fish 'dragon eyes'	1.888 €
					three fish 'golden carp'	2.010 €

OPTIONS FOR THE INTERIOR FIGURES:

ONE FISH 'Golden Carp'

ONE FISH 'Bubble eyes'

TWO FISH 'Dragon eyes'

THREE FISH 'Golden Carp'

Giro

BY PEDRO PAULO VENZON

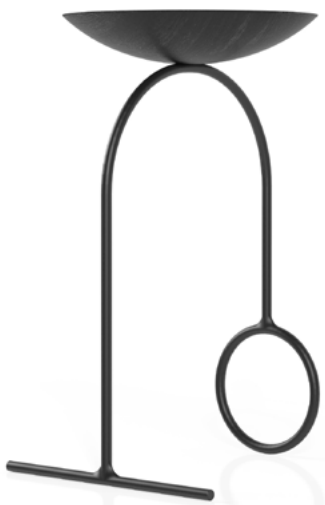

Giro

BY PEDRO PAULO VENZON

VICCARTE

The Viccarte collection edits artistic furniture pieces without pressure or market requirements.
Viccarte does not edit furniture pieces but sculptures so its use must be careful since they are not subject to tests of severe use, stability, etc.
Therefore Viccarbe is not responsible for damages of the piece or to third parties for an improper use.

Stained solid oak tabletop in the finishes of the collection.

Calibrated steel structure powder coated in thermoreinforced polyester in white or black.

Plastic glides.

GIRO - ESCULPTURE TABLE

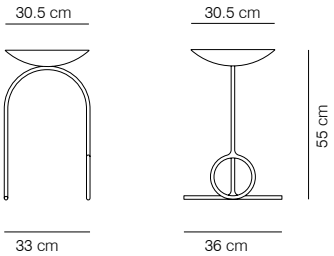

CODE	MODEL	PACKAGING	WEIGHT (kg)	FINISHES			PUBLIC PRICE
				STRUCTURE	TABLE TOP		
GIRO	ESCULPTURE TABLE	40x40x60 (0.10) x1	5.1	white, black	lacquered	white, black	576 €
					stained	matt oak, cognac, ash and wenge	576 €

OPTIONS FOR FINISHES:

- BASE: white and black.
- TOP: - STAINED: matt oak, cognac, ash and wenge.
  - LACQUERED (open pore): black and white.

NB: Due to the fact that the wood used is natural, the finish may vary.

Bamba

BY PEDRO PAULO VENZON

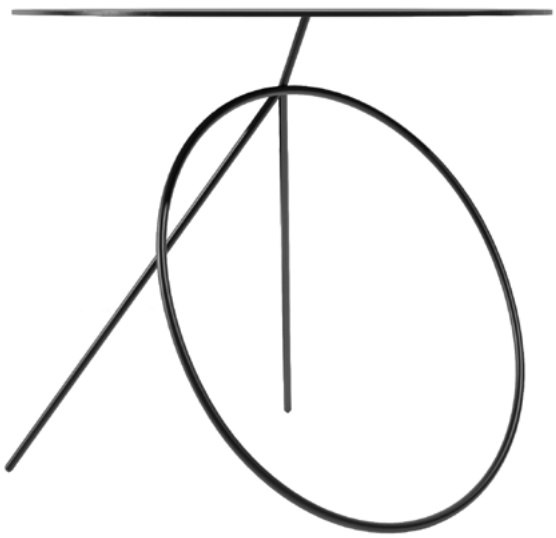

Bamba

BY PEDRO PAULO VENZON

VICCARTE

The Viccarte collection edits artistic furniture pieces without pressure or market requirements.
Viccarte does not edit furniture pieces but sculptures so its use must be careful since they are not subject to tests of severe use, stability, etc.
Therefore Viccarbe is not responsible for damages of the piece or to third parties for an improper use.

Tabletop and calibrated steel structure powder coated in thermoreinforced polyester in single-color white or black.

Plastic glides.

BAMBA - ESCULPTURE TABLE

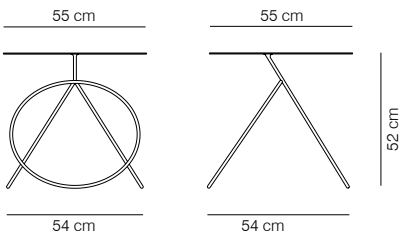

CODE	MODEL	PACKAGING	WEIGHT (kg)	FINISHES	PUBLIC PRICE
BAMBA	ESCULPTURE TABLE	64x64x60 (0.25) x1	14	white, black	468 €

OPCIONES FINISHES:

- LACQUERED: black and white.

FABRICS CONTRACT

Umami
Metric
Messenger
Velvet Seven
Remix
Maple
Field
Cava
Canvas
Hero
Savanna
Fiord
Steelcuttrio
Hallingdal
Divinna Melagne
Divina MD
Vinyl Valencia ™
Leather Serie 100

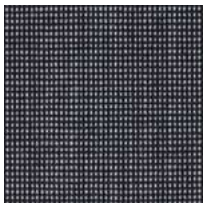

Umami 191
Kvadrat

Umami 181
Kvadrat

Umami 471
Kvadrat

Umami 251
Kvadrat

Umami 221
Kvadrat

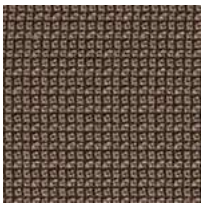

Metric 6
Kvadrat

Metric 5
Kvadrat

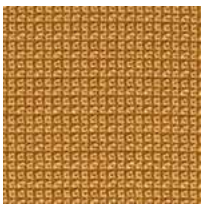

Metric 19
Kvadrat

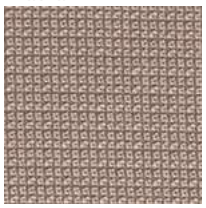

Metric 2
Kvadrat

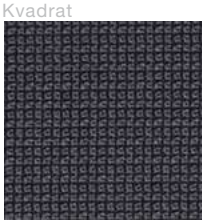

Metric 24
Kvadrat

Messenger 4 - 81
Kvadrat

Messenger 4 - 25
Kvadrat

Messenger 4 - 54
Kvadrat

Messenger 4 - 61
Kvadrat

Messenger 4 - 78
Kvadrat

Velvet Seven Ocre 23
Textaafoam

Velvet Seven Wine Red 39
Textaafoam

Velvet Seven Blosson 166
Textaafoam

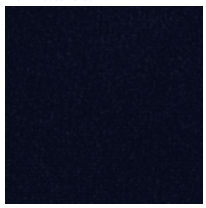

Velvet Seven Navy 49
Textaafoam

Velvet Seven Steel 149
Textaafoam

	Umami	Metric	Messenger	Velvet Seven
Composition	90% New wool (worsted), 10% Nylon	51% Post industrial recycled, 49% Polyester, 0% Stain resistant PF	78% Post industrial recycled, 15% Polyester, 7% Nylon, 0% Stain resistant PF	100% Polyester
Durability	80.000 Martindale	70.000 Martindale	65.000 Martindale	100.000 Martindale
Fire Test	AS/NZS 3837, class 2 BS 5852 part 1 EN 1021-1/2 IMO FTP Code 2010 Part 8 NF D 60 013 UNI 9175 1IM US Cal. Bull. 117-2013 BS 5852 Crib 5 with treatment	BS 5852 Crib 5 with treatment EN 1021-1/2 with treatment NFPA 260 UNI 9175 1IM with treatment US Cal. Bull. 117-2013	BS 5852 part 1 with treatment EN 1021-1/2 with treatment IMO FTP Code 2010 Part 8 with treatment NF D 60 013 with treatment NFPA 260 EN 1021-1 BS 5852 Crib 5 with treatment	EN ISO 12947 1 & 2 EN ISO 12945-2 EN ISO B02 EN ISO 13934-1 EN ISO 13937-3 EN ISO 13936 2 EN ISO 105 X12

G2

Ecopiel Valencia ™
Schwarz 9035 Spradling

Ecopiel Valencia ™
Moss 5002 Spradling

Ecopiel Valencia ™
Marine 3068 Spradling

Ecopiel Valencia ™
Terracotta 0035 Spradling

Ecopiel Valencia ™
Graphite 4003 Spradling

Ecopiel Valencia ™
Taupe 0034 Spradling

Ecopiel Valencia ™
Titan 4042 Spradling

Ecopiel Valencia ™
Safran 6012 Spradling

Ecopiel Valencia ™
Lichtgrau 4052 Spradling

Ecopiel Valencia ™
Leinen 1049 Spradling

Ecopiel Valencia ™
Baltic 3069 Spradling

Ecopiel Valencia™
Sonne 2020 Spradling

Ecopiel Valencia ™
Perle 4045 Spradling

Ecopiel Valencia ™
Sisal 1048 Spradling

Ecopiel Valencia ™
Merlot 2001 Spradling

Ecopiel Valencia ™
Orange 6019 Spradling

Ecopiel Valencia ™
Auster 4040 Spradling

Ecopiel Valencia ™
Weiss 8032 Spradling

Ecopiel Valencia ™
Kirsche 2074 Spradling

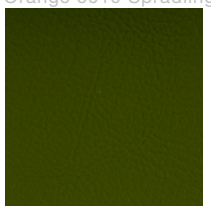

Ecopiel Valencia™
Olive 5001 Spradling

Vinyl Valencia ™

Composition	Vinyl / Urethane Topcoat	
Durability	300.000 Martindale	
Fire Test	EU: EN 1021 Part 1 & 2	AT: ÖNORM A 3800 Teil 1, Qualmbildungsklasse Q1 - schwachqualmend
	ES: UNE 23.727-90 1R/M.2	
	FR: NF P 92-503/M2	IMO FTP 2010 Code MSC.307 (88) Part 8 3.1 & 3.2
	DE: DIN 4102 B2	
	IT: UNI 9175 (1987) / UNI 9175/FA1 (1994) Classe 1.IM (UNO I EMME)	US: FMVSS 302
		US: FAR 25/853
	AT: ÖNORM B 3825, Gruppe 1 - Schwerbrennbares Verhalten.	

Protective Finishes:

PERMA**BLOK**³

A vinyl protective coating engineered to create a tough, effective barrier against the three biggest problems encountered in healthcare and hospitality environments: germs, abrasions and stains. You can't see it or feel it, yet the protection it offers results in extended performance and lasting beauty with a minimum of care.

G2

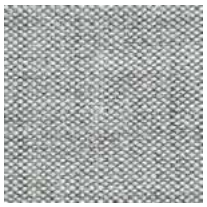

Remix 2 - 123
Kvadrat

Remix 2 - 143
Kvadrat

Remix 2 - 173
Kvadrat

Remix 2 - 233
Kvadrat

Remix 2- 223
Kvadrat

Maple 192
Kvadrat

Maple 102
Kvadrat

Maple 142
Kvadrat

Maple 342
Kvadrat

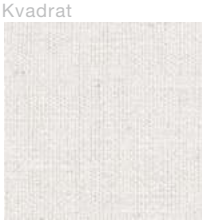

Maple 202
Kvadrat

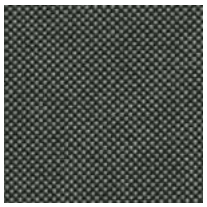

Field 182
Kvadrat

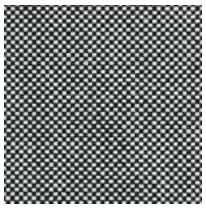

Field 142
Kvadrat

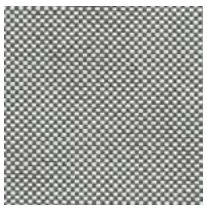

Field 132
Kvadrat

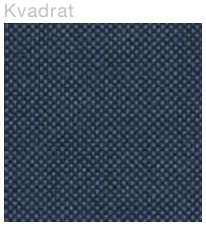

Field 782
Kvadrat

Field 662
Kvadrat

Cava 3 - 192
Kvadrat

Cava 3 - 142
Kvadrat

Cava 3 - 124
Kvadrat

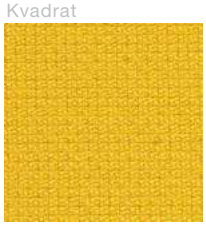

Cava 3 - 453
Kvadrat

Cava 3 - 782
Kvadrat

	Remix 2	Maple	Field	Cava 3
Composition	90% New wool (worsted), 10% Nylon	81% Viscose, 15% Linen, 4% Polyester	100% Trevira CS	90% New wool (worsted), 10% Nylon
Durability	100.000 Martindale	30.000 Martindale	100.000 Martindale	80.000 Martindale
Fire Test	AS/NZS 1530.3 AS/NZS 3837, class 2 BS 5852 Crib 5 with treatment BS 5852 part 1 EN 1021-1/2 IMO FTP Code 2010 Part 8 NF D 60 013 NFPA 260 UNI 9175 1IM US Cal. Bull. 117-2013 ÖNORM B1/ Q1	BS 5852 part 1 EN 1021-1/2	BS 5852 Crib 5 EN 1021-1/2 BS 5852 part 1, ig. s. 0 DIN 4102 B1 FAR 25.853 NF D 60 013 NF P 92 507 M1 IMO FTP Code 2010 Part 8 NF D 60 013 UNI 9175 1IM UNI 9177 Classe 1 US Cal. Bull. 117-2013 ÖNORM B1/ Q1 SN 198 898 5.2 AS/NZS 3837, class 1	AS/NZS 1530.3 AS/NZS 3837, class 2 BS 5852 part 1 DIN 4102 B2 EN 1021-1/2 IMO FTP Code 2010 Part 8 NF D 60 013 UNI 9175 1IM US Cal. Bull. 117-2013 ÖNORM B1/ Q1 BS 5852 Crib 5 with treatment

* Please note that CAVA 3 upholstery is not suitable for the following products: Maarten chair smooth / Maarten armchair smooth / Klip smooth and Wrapp smooth.

G3

Canvas 2 - 974
Kvadrat

Hero 181
Kvadrat

Savanna 192
Kvadrat

Fiord 191
Kvadrat

Canvas 2 - 134
Kvadrat

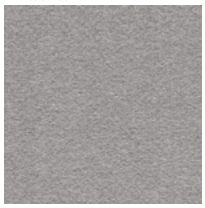

Hero 231
Kvadrat

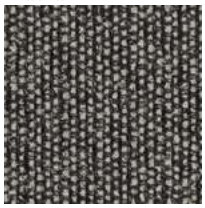

Savanna 152
Kvadrat

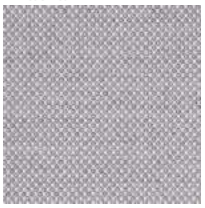

Fiord 251
Kvadrat

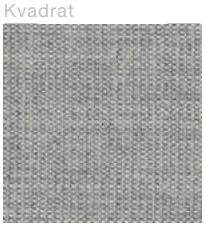

Canvas 2 - 124
Kvadrat

Hero 751
Kvadrat

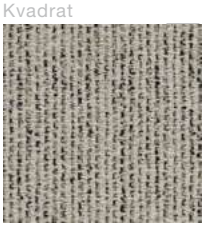

Savanna 122
Kvadrat

Fiord 771
Kvadrat

Canvas 2 - 854
Kvadrat

Hero 991
Kvadrat

Savanna 242
Kvadrat

Fiord 551
Kvadrat

Canvas 2 - 734
Kvadrat

Hero 931
Kvadrat

Savanna 202
Kvadrat

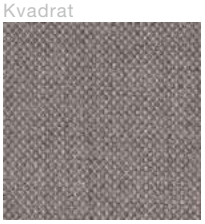

Fiord 271
Kvadrat

	Canvas 2	Hero	Savanna	Fiord
Composition	90% New wool (worsted), 10% Nylon	96% New wool, 4% Nylon	34% Polyester, 31% New wool, 26% Acrylic, 4% Cotton, 3% Nylon, 2% Linen	92% New wool (worsted), 8% Nylon
Durability	100.000 Martindale	45.000 Martindale	45.000 Martindale	60.000 Martindale
Fire Test	AS/NZS 1530.3 BS 5852 Crib 5 with treatment BS 5852 part 1 DIN 4102 B2 EN 1021-1/2 IMO FTP Code 2010 Part 8 NF D 60 013 NFPA 260 SN 198 898 5.3 with treatment UNI 9175 1IM US Cal. Bull. 117-2013 ÖNORM B1/ Q1	BS 5852 Crib 5 with treatment BS 5852 part 1 DIN 4102 B2 EN 1021-1/2 IMO FTP Code 2010 Part 8 NF D 60 013 NFPA 260 SN 198 898 5.3 with treatment UNI 9175 1IM US Cal. Bull. 117-2013 AS/NZS 3837, class 2	BS 5852 Crib 5 with treatment BS 5852 part 1 with treatment BS 5852 part 1, ig. s. 0 EN 1021-1/2 NF D 60 013 with treatment SN 198 898 5.3 with treatment US Cal. Bull. 117-2013	BS 5852 Crib 5 with treatment BS 5852 part 1 DIN 4102 B2 EN 1021-1/2 IMO FTP Code 2010 Part 8 NF D 60 013 UNI 9175 1IM US Cal. Bull. 117-2013 AS/NZS 3837, class 2

G4

Steelcut Trio 3 - 153
Kvadrat

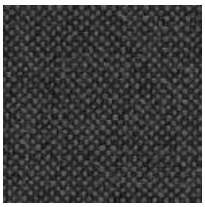

Hallingdal 65 - 173
Kvadrat

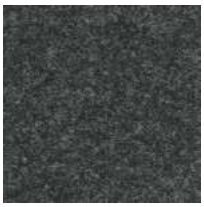

Divina Melagne 180
Kvadrat

Divina MD 783
Kvadrat

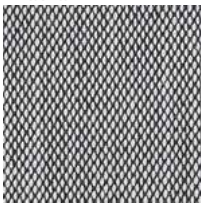

Steelcut Trio 3 - 124
Kvadrat

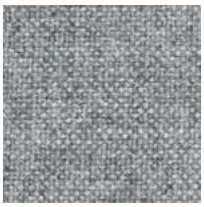

Hallingdal 65 - 130
Kvadrat

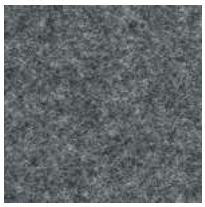

Divina Melagne 170
Kvadrat

Divina MD 733
Kvadrat

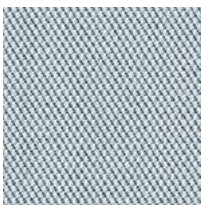

Steelcut Trio 3 - 713
Kvadrat

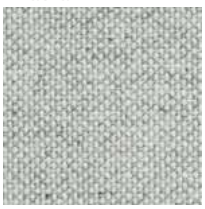

Hallingdal 65 - 110
Kvadrat

Divina Melagne 120
Kvadrat

Divina MD 713
Kvadrat

Steelcut Trio 3 - 453
Kvadrat

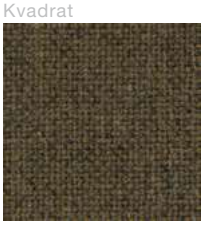

Hallingdal 65 - 227
Kvadrat

Divina Melagne 220
Kvadrat

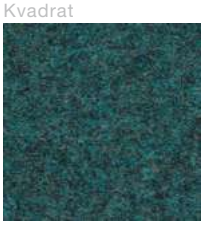

Divina MD 843
Kvadrat

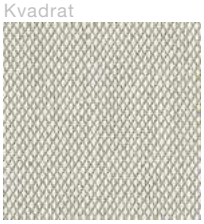

Steelcut Trio 3 - 213
Kvadrat

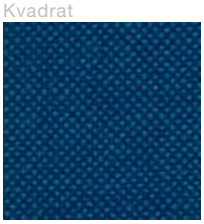

Hallingdal 65 - 810
Kvadrat

Divina Melagne 421
Kvadrat

Divina MD 613
Kvadrat

	Steelcut trio 3	Hallingdal 65	Divina Melange	Divina MD
Composition	90% New wool (worsted), 10% Nylon	70% New wool, 30% Viscose	100% New wool	100% New wool
Durability	100.000 Martindale	100.000 Martindale	45.000 Martindale	45.000 Martindale
Fire Test	AS/NZS 3837, class 2 BS 5852 part 1 DIN 4102 B2 EN 1021-1/2 IMO FTP Code 2010 Part 8 NF D 60 013 NFPA 260 SN 198 898 5.3 with treatment UNI 9175 1IM US Cal. Bull. 117-2013 ÖNORM B1/ Q1 BS 5852 Crib 5 with treatment AS/NZS 1530.3	AS/NZS 1530.3 AS/NZS 3837 BS 5852 Crib 5 BS 5852 part 1 DIN 4102 B2 EN 1021-1/2 IMO FTP Code 2010 Part 8 NF D 60 013 NFPA 260 SN 198 898 5.3 with treatment UNI 9175 1IM US Cal. Bull. 117-2013 ÖNORM B1/ Q1	AS/NZS 1530.3 BS 5852 Crib 5 BS 5852 part 1 BS 5867 part 2 type B DIN 4102 B2 EN 1021-1/2 EN 13501, C-s1, d0, glued IMO FTP Code 2010 Part 8 NF D 60 013 NFPA 260 SN 198 898 5.3 with treatment UNI 9175 1IM US Cal. Bull. 117-2013 ÖNORM B1/ Q1	AS/NZS 1530.3 BS 5852 Crib 5 BS 5852 part 1 BS 5867 part 2 type B DIN 4102 B2 EN 1021-1/2 EN 13501, C-s1, d0, glued IMO FTP Code 2010 Part 8 NF D 60 013 NFPA 260 SN 198 898 5.3 with treatment UNI 9175 1IM US Cal. Bull. 117-2013 ÖNORM B1/ Q1

G5

Piel 103
Antic Cuir

Piel 125
Antic Cuir

Piel 139
Antic Cuir

Piel 114
Antic Cuir

Piel 101
Antic Cuir

Piel 117
Antic Cuir

Piel 131
Antic Cuir

Piel 137
Antic Cuir

Piel 121
Antic Cuir

Piel 141
Antic Cuir

Piel 136
Antic Cuir

Piel 135
Antic Cuir

Piel 128
Antic Cuir

Piel 142
Antic Cuir

Piel 124
Antic Cuir

Piel 147
Antic Cuir

Piel 106
Antic Cuir

Piel 116
Antic Cuir

Piel 144
Antic Cuir

Piel 113
Antic Cuir

Serie 100

Composition	Polyvalent leather with regular grain offering a great cutting yield, with an extensive colour range. European cow.
Fire Test	UNE EN 1021-1&2, IMO MSC.61(67) All our leathers meet the REACH regulation. Thickness 1,1-1,2mm.

G5

In this samples you'll find a special upholstery sellection for the Viccarbe collection. Every family can be upholstered with additional colours; please consult the websites of our suppliers:

kvadrat.com / anticcuir.com / spradling.eu

FABRICS
GABRIEL

Medley
Atlantic
Step
Step Melange
Fame
Gaja 2C2
Crisp
Co Check
Capture
Fame Hybrid

Medley 60999
Gabriel

Medley 60004
Gabriel

Medley 63016
Gabriel

Medley 68005
Gabriel

Medley 67002
Gabriel

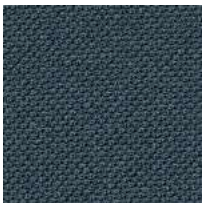

Atlantic 60143
Gabriel

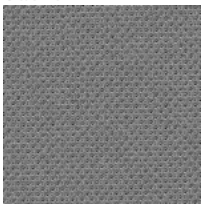

Atlantic 60011
Gabriel

Atlantic 61078
Gabriel

Atlantic 67030
Gabriel

Atlantic 61164
Gabriel

Step 60021
Gabriel

Step 60090
Gabriel

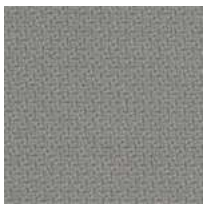

Step 60091
Gabriel

Step 62097
Gabriel

Step 64159
Gabriel

Step Melange 6103
Gabriel

Step Melange 63075
Gabriel

Step Melange 66018
Gabriel

Step Melange 61102
Gabriel

Step Melange 60092
Gabriel

	Medley	Atlantic	Step	Step Melange
Composition	100% polyester	100% polyester	100% Trevira cs	100% Trevira cs
Durability	75.000 Martindale	110.000 Martindale	100.000 Martindale	100.000 Martindale
Fire Test	BS EN 1021 1&2 Cigarette and Match BS EN 1021-1 Cigarette BS 5852 Part 1 0,1 Cigarette & match BS 476 Part 7, class 2 Class Uno UNI 9175 Class 1 I EMME Class Uno UNI 9174 - UNI 8457 ÖNORM B 3825-B2-3800-Q1 UK CA TB 117-2013 ASTM E 84	CA TB 117-2013 ASTM E 84 ÖNORM B 3825-B1-3800-Q1 UK Class Uno UNI 9175 Class 1 I EMME BS EN 1021 1&2 Cigarette and Match BS EN 1021-1 Cigarette	IMO MSC 307(88) Annex 1 part 8 MED Certificate IMO DIN 4102 B1 NFP 92-503/504/505 M1 BS EN 1021 1&2 Cigarette and Match BS 5852 Part 1 0,1 Cigarette & match BS 5852 Crib 5 ÖNORM B 3825-B1-3800-Q1 UK FAR/JAR 25.853 (a) (i) (ii) BS 7176 Medium hazard AM 18 - NF D 60-013-(only for fabric) CA TB 117-2013 Class Uno UNI 9175 Class 1 I EMME DIN EN 13501-1 B-s1,d0	IMO MSC 307(88) Annex 1 part 8 MED Certificate IMO DIN 4102 B1 NFP 92-503/504/505 M1 BS EN 1021 1&2 Cigarette and Match BS 5852 Part 1 0,1 Cigarette & match BS 5852 Crib 5 ÖNORM B 3825-B1-3800-Q1 UK FAR/JAR 25.853 (a) (i) (ii) BS 7176 Medium hazard AM 18 - NF D 60-013-(only for fabric) CA TB 117-2013 Class Uno UNI 9175 Class 1 I EMME DIN EN 13501-1 B-s1,d0

G2

Fame 61003
Gabriel

Gaja 2C2 66061
Gabriel

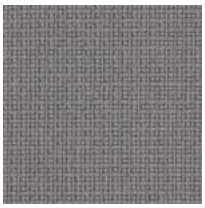

Fame 60078
Gabriel

Gaja 2C2 60001
Gabriel

Fame 60017
Gabriel

Gaja 2C2 61115
Gabriel

Fame 68146
Gabriel

Gaja 2C2 62037
Gabriel

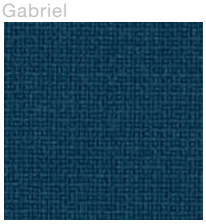

Fame 67005
Gabriel

Gaja 2C2 62041
Gabriel

	Fame	Gaja 2C2
Composition	95% wools of New Zealand / 5% polyamide	100% wools of New Zealand
Durability	200.000 Martindale	50.000 Martindale
Fire Test	BS EN 1021-1 Cigarette BS EN 1021-2 Match BS 5852 Crib 5 CA TB 117-2013 Class Uno UNI 9175 Class 1 I EMME AM 18 - NF D 60-013-(only for fabric) BS 5852 Part 1 0,1 Cigarette & match ÖNORM B 3825-B1-3800-Q1 UK IMO MSC 307(88) Annex 1 part 8 MED Certificate IMO BS 476 Part 7, class 1	Class Uno UNI 9175 Class 1 I EMME BS EN 1021 1&2, BS 7176 Medium hazard BS 5852 Part 1 0,1 Cigarette & match BS EN 1021 1&2 Cigarette and Match BS 5852 Crib 5 BS 476 Part 7, class 1 IMO MSC 307(88) Annex 1 part 8 MED Certificate IMO CA TB 117-2013

G3

Crisp 04033
Gabriel

Go Check 60081
Gabriel

Crisp 04118
Gabriel

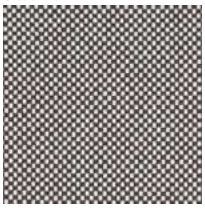

Go Check 60079
Gabriel

Crisp 04013
Gabriel

Go Check 64183
Gabriel

Crisp 04301
Gabriel

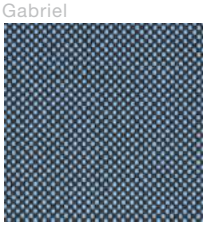

Go Check 66135
Gabriel

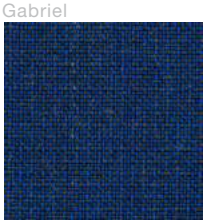

Crisp 04124
Gabriel

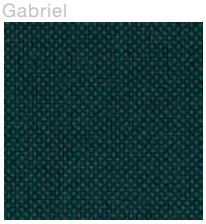

Go Check 68152
Gabriel

	Crisp	Go Check
Composition	93% wools of New Zealand / 7% polyamide	100% Trevira cs
Durability	200.000 Martindale	80.000 Martindale
Fire Test	BS 5852 Part 1 0,1 Cigarette & match BS EN 1021 1&2 Cigarette and Match Class Uno UNI 9175 Class 1 I EMME CA TB 117-2013 IMO MSC 307(88) Annex 1 part 8 MED Certificate IMO ÖNORM B 3825-B2-3800-Q1 UK	BS EN 1021 1&2 Cigarette and Match BS EN 1021-1 Cigarette BS 5852 Part 1 0,1 Cigarette & match BS 5852 Crib 5 BS 7176 Medium hazard DIN 4102 B1 NFP 92-503/504/505 M1 ÖNORM B 3825-B1-3800-Q1 UK Class Uno UNI 9175 Class 1 I EMME FAR/JAR 25.853 (a) (i) (ii) CA TB 117-2013 DIN EN 13501-1 B-s1,d0

G4

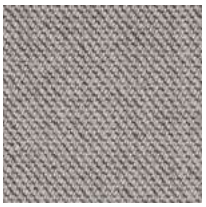

Capture 04101
Gabriel

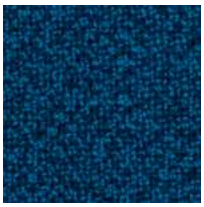

Fame Hybrid 02401
Gabriel

Capture 04201
Gabriel

Fame Hybrid 02101
Gabriel

Capture 05201
Gabriel

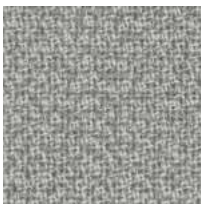

Fame Hybrid 01101
Gabriel

Capture 04803
Gabriel

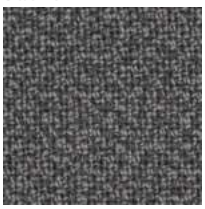

Fame Hybrid 01201
Gabriel

Capture 05001
Gabriel

Fame Hybrid 01301
Gabriel

	Capture	Fame Hybrid
Composition	85% wools of New Zealand / 15% polyamide	95% wools of New Zealand / 5% polyamide
Durability	200.000 Martindale	150.000 Martindale
Fire Test	BS EN 1021 1&2 Cigarette and Match BS 5852 Part 1 0,1 Cigarette & match Class Uno UNI 9175 Class 1 I EMME CA TB 117-2013	BS EN 1021 1&2 Cigarette and Match BS 5852 Part 1 0,1 Cigarette & match IMO MSC 307(88) Annex 1 part 8 MED Certificate IMO Class Uno UNI 9175 Class 1 I EMME CA TB 117-2013

G5

In this samples you'll find a special upholstery sellection for the Viccarbe collection. Every family can be upholstered with additional colours; please consult the websites of our suppliers:

gabriel.dk

Advantage
Xtreme
Urban
Chateau
Citadel
Lucia
Blazer
Aquarius
Main Line Plus
Nexus

Advantage AD066
Camira

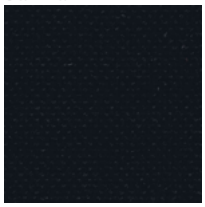

Advantage AD055
Camira

Advantage AD029
Camira

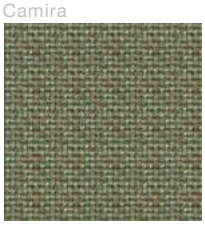

Advantage AD030
Camira

Advantage AD016
Camira

Xtreme YS081
Camira

Xtreme YS094
Camira

Xtreme YS004
Camira

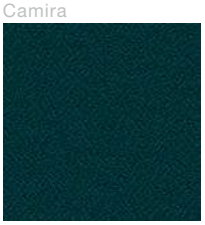

Xtreme YS011
Camira

Xtreme YS161
Camira

Urban YN212
Camira

Urban YN206
Camira

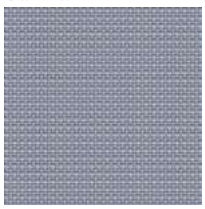

Urban YN094
Camira

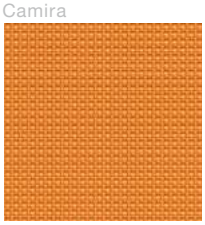

Urban YN148
Camira

Urban YN079
Camira

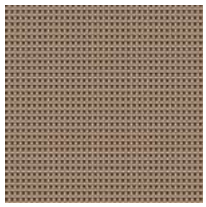

Chateau CSP01
Camira

Chateau CSP33
Camira

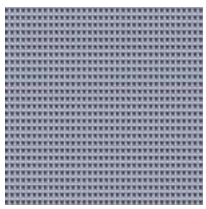

Chateau CSP36
Camira

Chateau CSP20
Camira

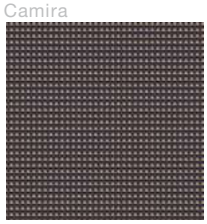

Chateau CSP02
Camira

	Advantage	Xtreme	Urban	Chateau
Composition	60% Polypropylene, 30% Wool, 10% Viscose	100% Recycled Flame Retardant Polyester. Non metallic dyestuffs	100% Virgin Wool. Non metallic dyestuffs	100% Flame Retardant Polypropylene
Durability	80.000 Martindale	100.000 Martindale	50.000 Martindale	35.000 Martindale
Fire Test	Cigarette & Match BS 7176 Low Hazard	EN 1021 - 1 Cigarette EN 1021 - 2 Match BS 5852 Ignition Source 5	EN 1021 - 1 Cigarette EN 1021 - 2 Match BS 5852 Ignition Source 5 when FR treated EN 13501-1 Adhered Class B, s1, d0 when FR treated EN 13501-1 Un-adhered Class D, s2, d0 when FR treated	EN 1021 - 1 Cigarette EN 1021 - 2 Match

G2

Citadel FL822
Camira

Lucia YB108
Camira

Citadel FL832
Camira

Lucia YB165
Camira

Citadel FL833
Camira

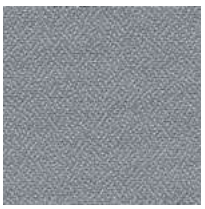

Lucia YB170
Camira

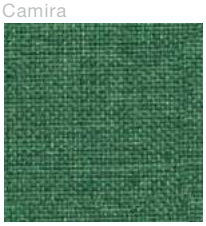

Citadel FL828
Camira

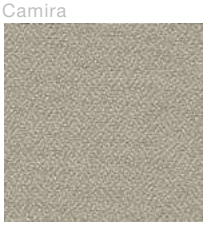

Lucia YB093
Camira

Citadel FL830
Camira

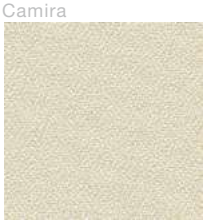

Lucia YB107
Camira

	Citadel	Lucia
Composition	100% Flame Retardant Polypropylene	100% Recycled Polyester. Non metallic dyestuffs
Durability	30.000 Martindale	
Fire Test	EN 1021 - 1 Cigarette EN 1021 - 2 Match BS 7176 Low Hazard DIN 4102 B1 ÖNORM B 3825 & A 3800-1 UNI 9175 1 IM	EN 1021 - 1 Cigarette EN 1021 - 2 Match BS 7176 Low Hazard BS 476 Part 7 Class 1 EN 13501-1 Adhered Class B, s1, d0 EN 13501-1 Un-adhered Class B, s1, d2

G2

Blazer CUZ1D
Camira

Aquarius JA508
Camira

Main Line Plus IF056 Brindle
Camira

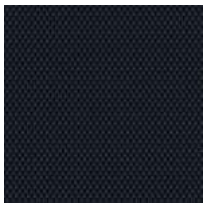

Nexus UNY11
Camira

Blazer CUZ63
Camira

Aquarius JA507
Camira

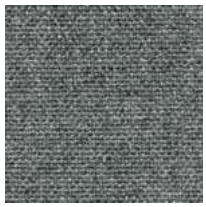

Main Line Plus IF058 Lead
Camira

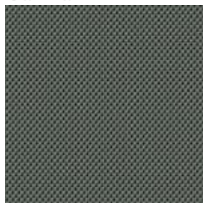

Nexus UNY09
Camira

Blazer CUZ58
Camira

Aquarius JA426
Camira

Main Line Plus IF057 Prism
Camira

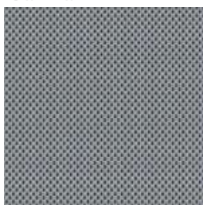

Nexus UNY07
Camira

Blazer CUZ1W
Camira

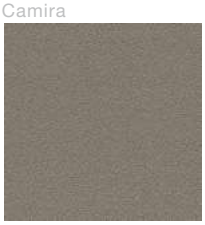

Aquarius JA409
Camira

Maixn Line Plus IF111 Clipper
Camira

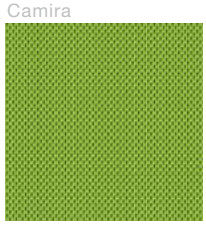

Nexus UNY05
Camira

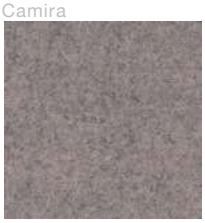

Blazer CUZ86
Camira

Aquarius JA046
Camira

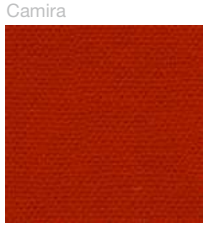

Main Line Plus IF120 Celtic
Camira

Nexus UNY03
Camira

	Blazer	Aquarius	Main Line Plus	Nexus
Composition	100% Recycled Flame Retardant Polyester. Non metallic dyestuffs	100% Virgin Wool. Non metallic dyestuffs	67% Wool, 20% Flame Retardant Viscose, 13% Viscose	100% Polyester
Durability	100.000 Martindale	50.000 Martindale	50.000 Martindale	80.000 Martindale
Fire Test	EN 1021 - 1 Cigarette EN 1021 - 2 Match BS 5852 Ignition Source 5	EN 1021 - 1 Cigarette EN 1021 - 2 Match BS 5852 Ignition Source 5 when FR treated Cigarette & Match BS 7176 Low Hazard UNI 9175 Classe 1 IM Medium Hazard when FR treatment requested BS 5867 : Part 2 : type B with Zirpro treatment	EN 1021 - 1 Cigarette EN 1021 - 2 Match BS 5852 Ignition Source 5 Cigarette & Match BS 7176 Low Hazard BS 7176 Medium Hazard Plus BS 5867 : Part 2 : Type B Curtains & Drapes	EN 1021 - 1 Cigarette EN 1021 - 2 Match BS 476 Part 7 Class 1 Cigarette & Match BS 7176 Low Hazard EN 13501-1 Adhered Class B, s2, d0 EN 13501-1 Un-adhered Class C, s1, d0 UNI 9175 Classe 1 IM

G3

In this samples you'll find a special upholstery sellection for the Viccarbe collection. Every family can be upholstered with additional colours; please consult the websites of our suppliers:

camirafabrics.com

G2
FABRICS
HOME

Vulcano
Gaudí
Matiss

G3
FABRICS
HOME

Siena
Reggio
Lido

VULCANO

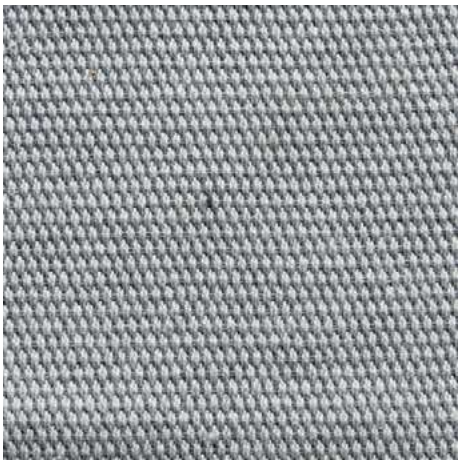
03

05

04

18

26

17

19

02

06

14

22

23

25

12

11

20

21

GAUDÍ

51

02

12

53

05

11

14

MATISS

12

05

54

52

53

07

10

08

64

45

SIENA

35

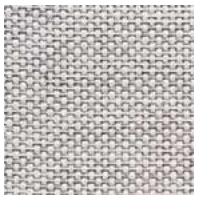
31

03

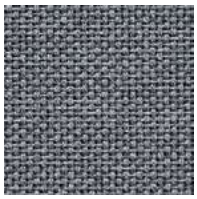
05

07

33

15

38

12

11

10

13

28

27

17

39

36

REGGIO

447110

447030

447070

447180

LIDO

03

04

09

02

01

05

06

08

07

Vulcano

Composition: 91% cotton, 9% polyester
Width: 140 cm
Weight: 690 gr/ml

TEST:

Abrasion (UNI EN ISO 12947):
25.000 Martindale rubs

Pilling (UNI EN ISO 12945):
Note 4

Lightfastness (UNI EN ISO 105-B02):
Note 5

Gaudí

Composition: 60% polypropylen, 35% polyester, 5% cotton
Width: 140 cm
Weight: 650 gr/ml

TEST:

Abrasion (EN ISO 12947):
46.000 Martindale rubs

Pilling (EN ISO 12945):
Note 5

Lightfastness (EN ISO 105-B02):
Note 5-6

Matiss

Composition: 55% polyester, 20% viscose,15% cotton, 10% linen
Width: 138 cm
Weight: 731 gr/ml

TEST:

Abrasion (EN ISO 12947):
35.000 Martindale rubs

Pilling (EN ISO 12945):
Note 4-5

Lightfastness (EN ISO 105-B02):
Note 5-6

Siena

Composition: 63% cotton, 20% polyester, 17% viscose
Width: 138 cm
Weight: 760 gr/ml

TEST:

Abrasion (UNI EN ISO 12947):
25.000 Martindale rubs

Pilling (UNI EN ISO 12945):
Note 4

Lightfastness (UNI EN ISO 105-B02):
Note 5

Reggio

Composition: 30% cotton, 30% viscose, 25% wool, 15% polyamid
Width: 140 cm
Weight: 600 gr/ml

TEST:

Abrasion (BS EN ISO 12947):
100.000 Martindale rubs

Pilling (BS EN ISO 12945):
Note 4

Lightfastness (BS EN ISO 105-B02):
Note 4-5

Lido

Composition: 46% cotton, 28% polyester, 20% viscose, 6% linen
Width: 138 cm
Weight: 880 gr/ml

TEST:

Abrasion (UNI EN ISO 12947):
25.000 Martindale rubs

Pilling (UNI EN ISO 12945):
Note 4-5

Lightfastness (UNI EN ISO 105-B02):
Note 5

G4
FABRICS
HOME

Rico
Gubbio
Shabby

G5
FABRICS
HOME

Sera
Velours Caviar

RICO

70

130

250

80

00

90

21

320

290

400

150

280

270

GUBBIO

11

21

22

49

60

08

09

07

00

50

SHABBY

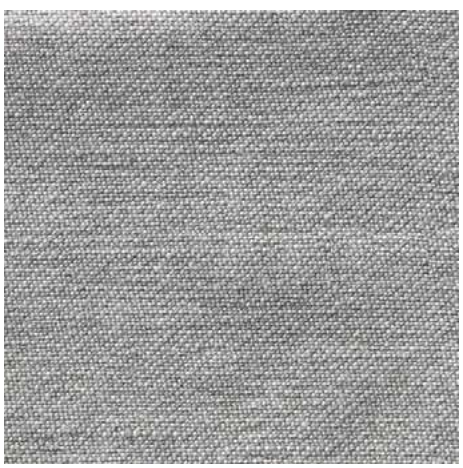
08

14

04

11

18

01

13

16

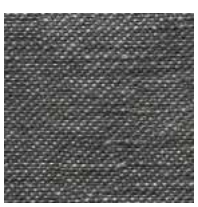
02

06

05

SERA

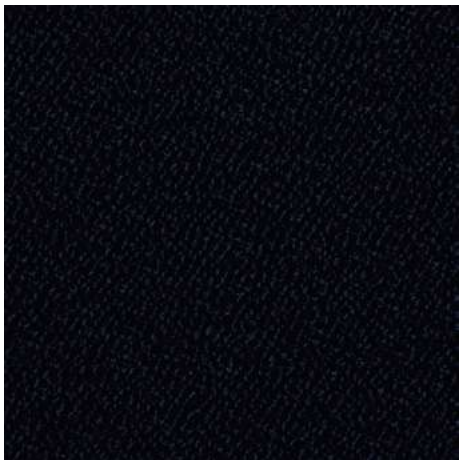
Amur

MirrorS

tone

Gravel

Anthrazit

Ebony

Snow

Calla

Flanell

Taupe

Walnut

Torba

Mare

Berry

Glow

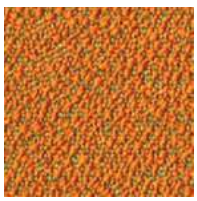
Chutney

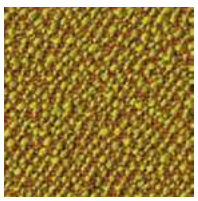
Tivoli

VELOURS CAVIAR

11

01

09

10

05

06

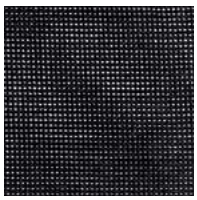
08

13

12

14

02

03

Rico

Composition: 56% cotton, 30% viscose, 14% linnen
Width: 140 cm
Weight: 900 gr/ml

TEST:

Abrasion (BS EN ISO 12947):
36.000 Martindale rubs

Pilling (BS EN ISO 12945):
Note 3-4

Lightfastness (BS EN ISO 105-B02):
Note 4-5

Gubbio

Composition: 48% cotton,15% viscose, 7% linnen, 30% polyester
Width: 140 cm
Weight: 740 gr/ml

TEST:

Abrasion (BS EN ISO 12947):
52.000 Martindale rubs

Pilling (BS EN ISO 12945):
Note 4

Lightfastness (BS EN ISO 105-B02):
Note 4-5

Shabby

Composition: 68% linnen, 32% cotton
Width: 138 cm
Weight: 600 gr/ml

TEST:

Abrasion (UNI EN ISO 12947):
20.000 Martindale rubs

Pilling (UNI EN ISO 12945):
Note 4

Lightfastness (UNI EN ISO 105-B02):
Note >4

Sera

Composition: 94% virgin whool, 6% polyamid
Width: 140 cm
Weight: 910 gr/ml

TEST:

Abrasion (DIN EN ISO 12947):
122.000 Martindale rubs

Pilling (EN ISO 12945):
Note 4-5

Lightfastness (ISO 105-B02):
Note 5-8

Flame resistance
FAR 25.853 (12 sec. vertical)
CAL TB 117-2013
DIN 4102-1-B2
EN 13501-1
BS 5852:2006 (part1)
BS 5852:2006 (part2) Crib5
IMO: MED 96/98/EC

Velours Caviar

Composition: 56% cotton, 44% viscose
Width: 130 cm
Weight: 729 gr/ml

TEST:

Abrasion (UNI EN ISO 12947):
60.000 Martindale rubs

Pilling (UNI EN ISO 12945):
Note 4-5

Lightfastness (UNI EN ISO 105-B02):
Note 4

SAMPLES

Powder coated
Lacquers
Stains
Tops

LACQUERS | WHITE RAL 9003

LACQUERS | BLACK RAL 9005

LACQUERS | GREY RAL 7004

LACQUERS | SAND NCS3005Y50R

LACQUERS | TOBACCO RAL 8028

LACQUERS | SMOKE RAL 101 9

LACQUERS | SILVER RAL 9006

LACQUERS | RED RAL 3001

LACQUERS | MUSTARD RAL 101 2

LACQUERS | GREEN RAL 6007

LACQUERS | BLUE RAL 5024

LACQUERS | BRONZE

LACQUERS | ORANGE RAL 200 5

POWDER COATED | WHITE RAL 9003

POWDER COATED | RED RAL 1012

POWDER COATED | SAND RAL 1019

POWDER COATEDB | LACK RAL 9005

POWDER COATED | ALTEA BLUE RAL 5000

POWDER COATED | FLUORESCENT ORANGE RAL 2005

STAINS | MATT OAK

STAINS | ASH

STAINS | WENGE

STAINS | COGNAC

MDF WITH HPL | WHITE

MDF WITH HPL | BLACK

LOW PRESSURE LAMINATE | WHITE

LOW PRESSURE LAMINATE | BLACK

COMPACT
BLACK EDGE | WHITE

COMPACT
BLACK EDGE | BLACK

COMPACT
WHITE EDGE | WHITE

HPL | WHITE

HPL | BLACK

FINISHING PROCESS white (smooth)
The tested finishing system fulfils the requirements in the standards UNE 89401-1 and UNE 89401-3 to be used a finishing system.

FINISHING PROCESS white (microtextured)
The tested finishing system fulfils the requirements in the standards UNE 89401-1 and UNE 89401-2 and UNE 89401-3 to be used a finishing system.

TEST CERTIFICATES

AD-HOC
The model tested complies satisfactorily with specifications of standard UNE EN 15373:07, according to the following tests:
General requirements for safety.
Stability.
Vertical static load on back.
Vertical downwards static lod test.
Seat impact test.
Back impact test.
Arm impact test.

ASPA
The model tested complies satisfactorily with specifications of standard UNE EN 15372:08, according to the following tests:
Horizontal fatigue.
Vertical fatigue for cantilever or pedestal.

The model tested complies satisfactorily with specifications of standard ANSI/SOHO S6.5 R2013, according to the following tests:
Distributed functional static load.
Concentred functional static load.
Distributed proof static load.
Concentred proof static load.
Top load ease test - static.
Horizontal racking resistence test.
Drop test.

BURIN
The model tested complies satisfactorily with specifications of standard UNE EN 15372:08, according to the following tests:
Safety. General requirements and shear and squeeze points.
Horizontal static load.
Vertical static load.
Horizontal fatigue.
Vertical fatigue, cantilever or pedestal tables.
Vertical impact for tables without glass.

COMMON
The model tested complies satisfactorily with specifications of standard ANSI BIFMA X5.4-2005, according to the following tests:
Type of seat.
Seat cyclical impact test.
Fatigue on the front edge of the seat.
Seat unique impact test.
Structure durability.
Leg forward static load.
Leg sideways static load.
Drop multiple seats.
Front stability (module h=440 mm).

FEDELE
The model tested complies satisfactorily with specifications of standard ANSI/BIFMA X5.4:2012, according to the following tests:
General requirements for safety.
Seat front edge static load test.
Vertical static load on back.
Horizontal static load on armrest.
Arm downwards static load test.
Seat and back fatigue test.
Fatigue on the front edge of the seat.
Fatigue on the armrest.
Leg forward static load.
Leg sideways static load.
Seat impact test.
Back impact test.
Arm impact test.
Stability.

LAST MINUTE stool
The model tested complies satisfactorily with specifications of standard UNE EN 16139:13, according to the following tests:
Fatigue on the front edge of the seat.
Fatigue on seat and back.
Seat front edge stability
Lateral stability for seats without armrests

MAARTEN swivel chair
The model tested complies satisfactorily with specifications of standard UNE EN 16139:13, according to the following tests:
Safety. General requirements and shear and squeeze points.
Seat and back static load test.
Seat front edge static load test.
Vertical static load on back.
Seat and back fatigue test.
Fatigue on the front edge of the seat.
Arm durability test.
Arm sideways static load test.
Arm downwards static load test.
Vertical upwards static load on arm rest.
Seat impact test.
Arm impact test.
Backward fall test.

NAGI high armchair
The model tested complies satisfactorily with specifications of standards UNE EN 16139:13, according to the following tests:
General requirements for safety.
Front roll-over stability.
Rear roll-over stability.
Stability roll-over in rocking chairs.
Static on seat load.
Load static on the front edge of the seat.
Durability of the seat and backrest.
Durability of the front edge of the seat.

SERRA rectangular
The model tested complies satisfactorily with specifications of standard UNE EN 15372:08, according to the following tests:
Safety. General requirements and shear and squeeze points.
Horizontal static load.
Vertical static load.
Horizontal fatigue.
Vertical fatigue, cantilever or pedestal tables.
Vertical impact for tables without glass.

SERRA round
The model tested complies satisfactorily with specifications of standard ANSI/SOHO S6.5, according to the following tests:
Safety. General requirements and shear and squeeze points.
Stability under vertical load.
Horizontal stability for desks and table with casters.
Concentrated functional load.
Concentrated trial load.
Cyclic loading
Resistance of the legs.
Resistance to manipulation
Drop.

FINISHING PROCESS white (smooth)
The tested finishing system fulfils the requirements in the standards UNE 89401-1 and UNE 89401-3 to be used as a finishing system.

FINISHING PROCESS white (microtextured)
The tested finishing system fulfils the requirements in the standards UNE 89401-1, UNE 89401-2 and UNE 89401-3 to be used as a finishing system.

VICCARBE reserves the exclusive right of all trademarks, photographs, and designs used in its offer, in addition to the commercial presentation of its products. Accordingly, any reproduction, fabrication, distribution and/or marketing, in any way, of the products concerned or of their commercial presentation, is strictly prohibited.

www.viccarbe.com

Viccarbe Hábitat s.l. C/ Camí el Racó 23 P. I. Norte Beniparrell 46469 - Spain Tel (+34) 96 120 10 10 Fax (+34) 96 121 12 11 info@viccarbe.com www.viccarbe.com